WOODLANDER™ XL OFF-ROAD SAWMILL TRAILER

*Track Not Included

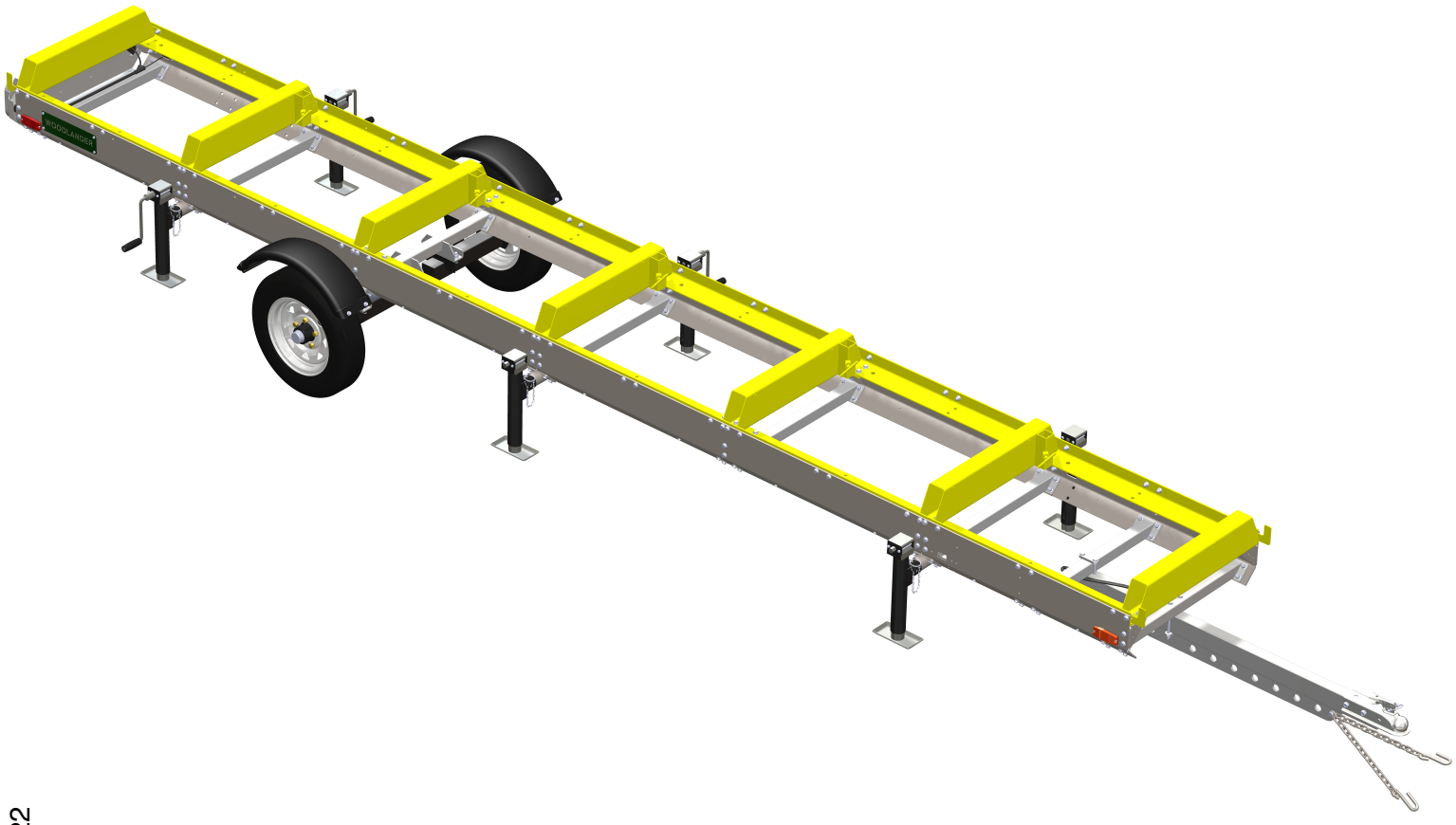

0001709-M-EN: Rev D
Publication Date: 07-Oct-2022

OPERATOR'S MANUAL

WOODLAND MILLS

DISCOVER THE WOODLAND™

The Woodlander™ XL and Woodlander™ MAX XL are *off-road only* sawmill trailers compatible with HM126, HM130 & HM130MAX sawmills. Woodlander™ is a trademark of Woodland Mills, Inc.

This page intentionally left blank.

TABLE OF CONTENTS

TABLE OF CONTENTS 1
INTRODUCTION 3
GENERAL SAFETY RULES 4
INSPECTION/MAINTENANCE 5
TECHNICAL SPECIFICATIONS 6
BOLT TORQUE SPECIFICATIONS 6
UNPACKING 7
COMPONENT LISTS 8
TO-SCALE HARDWARE 10
BOLTS & SCREWS 10
WASHERS 12
NUTS 13
SAWMILL COMPONENTS 14
SAWMILL HARDWARE 14
TRAILER ASSEMBLY 15
1. TOOLS REQUIRED 15
2. TRACK RAILS, JOINING GUSSETS, MID BUNK 16
3. LONG SIDE PLATES, JOINING GUSSETS 19
4. TRACK RAILS, END BUNKS, END GUSSETS 21
5. SWIVEL JACKS [TEMPORARY] 23
6. CENTRE BUNKS 24
7. MID BUNKS, JOINING GUSSETS 30
8. SHORT SIDE PLATES, CARRIAGE STOPS 32
9. CROSS BEAMS, JACK MOUNTS [ENDS] 36
10. CROSS BEAM, JACK MOUNTS [CENTRE] 39
11. CROSS BEAMS, AXLE CROSS BEAM, AXLE MOUNTS 41
12. AXLES 43
13. WHEELS 45
14. FENDERS 46
15. TONGUE, HITCH COUPLER 48
16. LIGHTING 50
17. NAMEPLATE 53

18. SAFETY CHAIN ____ 55
19. HEAD LOCK-DOWN PLATES ____ 56
SAWHEAD CARRIAGE LOCK-DOWN POSITIONS ____ 58
DRILLING THE LOCK-DOWN HOLES ____ 59
OPERATION ____ 60
LOCKING-DOWN THE SAWMILL HEAD ____ 60
REPLACEMENT PARTS ORDERING ____ 62
EXPLODED ASSEMBLY VIEWS ____ 63
CHASSIS AND TRACK ____ 63
TONGUE ____ 64
NORTH AMERICA ____ 64
EUROPE ____ 64
AXLES, WHEELS, AND FENDERS ____ 65
LIGHTING ____ 66
NORTH AMERICA ____ 66
EUROPE ____ 67
NAMEPLATES ____ 68
SWIVEL JACKS ____ 69
HEAD LOCK-DOWN ____ 70
PARTS LISTS ____ 71
NORTH AMERICA ____ 71
EUROPE ____ 73
NOTES ____ 75

INTRODUCTION

Congratulations on your purchase and welcome to Woodland Mills! This manual gives you the necessary information about your Woodlander™ XL sawmill trailer so you will be able to use it properly. The entire manual must be read and understood before using the trailer. If any questions should arise that are not covered by this manual, please contact Woodland Mills, Inc.

OWNER'S RECORD

Please take a moment to record the following information about your Woodlander™ sawmill trailer. If you need to call for assistance, please be ready to provide your model and serial numbers. This information will allow us to help you more quickly when you call.

MODEL NUMBER

SERIAL NUMBER

DATE OF PURCHASE

The Woodlander™ sawmill trailer is compatible with HM126, HM130 & HM130MAX sawmill and track systems for milling logs while the trailer is stationary and firmly supported on the ground. It is not intended to carry any additional weight or be used as a utility trailer.

The Woodlander™ XL and Woodlander™ MAX XL sawmill trailers are *off-road* trailers designed for certain applications only. We strongly recommend the trailer not be modified and/or used for any application other than that for which it was designed. If you have any questions relative to a particular application, DO NOT use the trailer until you have first contacted Woodland Mills to determine if it can or should be performed using the product.

For technical questions and replacement parts, please contact Woodland Mills, Inc.

GENERAL SAFETY RULES

WARNING!

Read and understand all instructions. Failure to follow all instructions listed below may result serious injury.

WARNING!

The warnings, cautions, and instructions discussed in this instruction manual cannot cover all possible conditions or situations that could occur. It must be understood by the operator that common sense and caution are factors which cannot be built into this product but must be supplied by the operator.

WARNING!

The trailer is not designed to carry any additional weight other than the sawmill and trailer itself while being towed. Failure to heed this warning could result in damage to the trailer and/or the sawmill.

Damage caused by towing additional weight will void the warranty.

WARNING!

The Woodlander™ XL and Woodlander™ MAX XL sawmill trailers are for ***off-road use only***. It is the owner's responsibility to make the trailer road-worthy if towing on improved roads, complying with all local laws and regulations.



WARNING!

The Woodlander™ XL and Woodlander™ MAX XL sawmill trailers are *not* designed for speeds exceeding **30 mph** [**50 km/h**].



INSPECTION/MAINTENANCE

- Check the tires before all trips. Make sure they are inflated to the pressure shown on the tire.
- Grease the axle bearings every 3 months or 1000 miles [1600 km], whichever comes first.
- Check the tow hitch ball coupler. Make sure it is not damaged.
- Check the wheel lug nuts before all trips. Make sure they are torqued properly.
- Check the lights. Make sure all the lights work properly. Replace any lights that do not work.
- Inspect trailer before all trips for any damaged or loose parts.

TECHNICAL SPECIFICATIONS

Item	Specification
Trailer Axle	Independent Torsion Axle Design
Trailer Wheels	5 Bolts @ 4.5 in [114 mm] & 5.30-12 DOT Approved Tires
Tire Pressure	Refer to Tire
Wheel Nut Torque	80 ft•lb [110 N•m]
Trailer Ball Coupler	2 in [50 mm]
Trailer Lights	LED Light Kit (stop, turn, tail, side markers, and license plate light)
Finish	Powder Coat Paint / Galvanized Steel
Fenders	Removable
Safety	Locking pins and safety straps to secure sawhead while travelling
Shipping Weight	Woodlander XL: 655 lb [297 kg]
	Woodlander MAX XL: 820 lb [372 kg]
Product Weight	Woodlander XL: 571 lb [259 kg]
	Woodlander MAX XL: 736 lb [334 kg]

BOLT TORQUE SPECIFICATIONS

Bolt (Thread Size)	Torque
M5	78 in•lb [9 N•m]
M6	133 in•lb [15 N•m]
M8	333 in•lb [38 N•m]
M10	53 ft•lb [72 N•m]
M12	93 ft•lb [126 N•m]

BOLT TORQUE WARNING!

The torque specifications listed above apply only to the track and trailer assembly outlined in this manual. They do *not* apply to the sawmill assembly. Follow the instructions in the sawmill operator's manual when assembling the carriage and sawhead.

UNPACKING

Remove all the parts from both the steel trailer crate and trailer extension box. Set the steel trailer crate aside as it will be used as a support for several of the assembly steps.

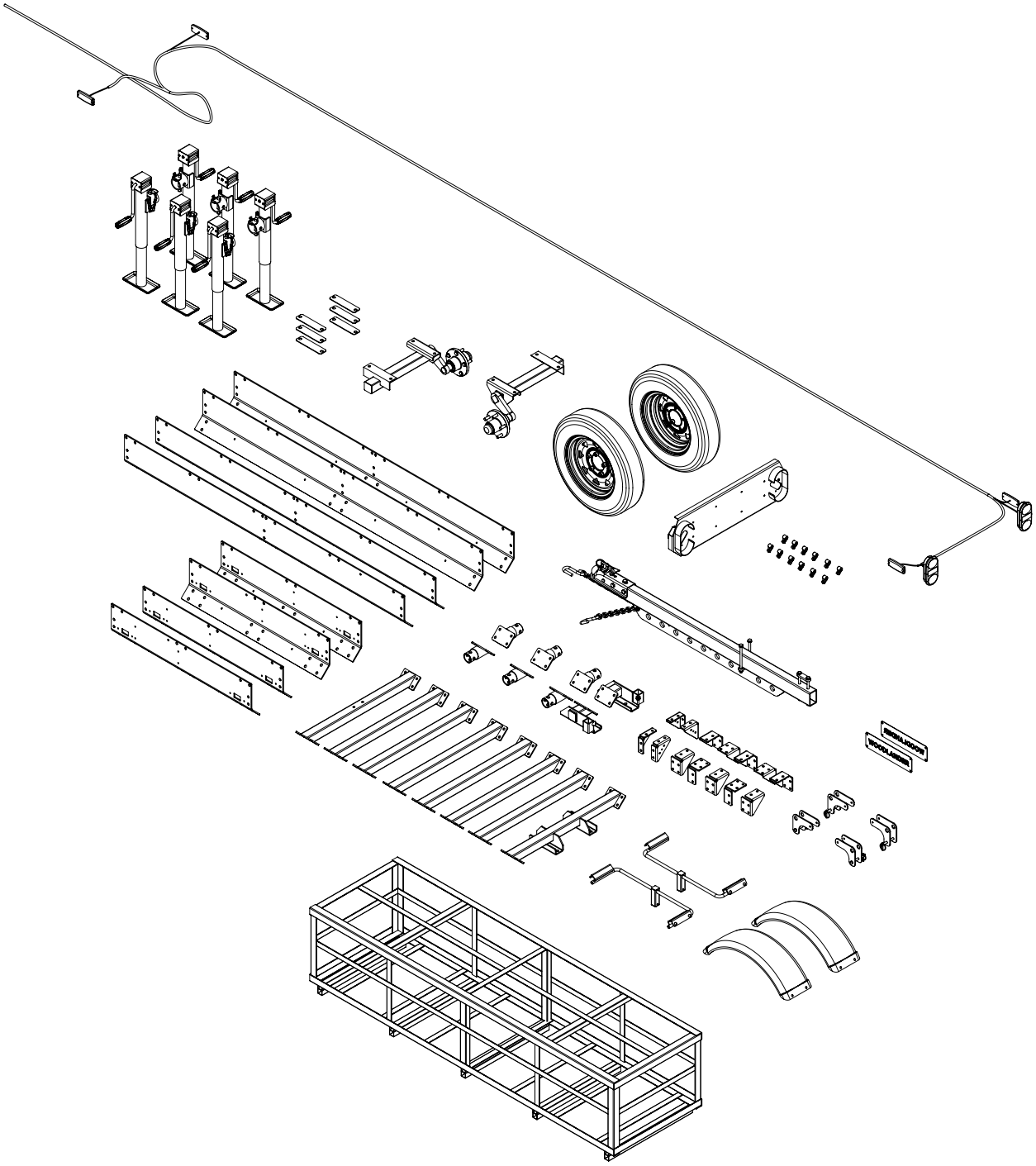

COMPONENT LISTS

Verify all component and hardware quantities are correct prior to assembling the trailer.

Note: component quantities shown below are the total quantities from both the Woodlander™ Trailer and Woodlander™ Trailer Extension crates.

4x	**End Gusset [0001373]**	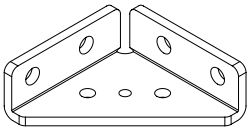
10x	**Joining Gusset [0001374]**	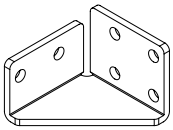
4x	**Long Side Plate [0001363]**	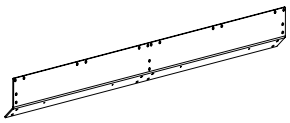
4x	**Short Side Plate [0001364]**	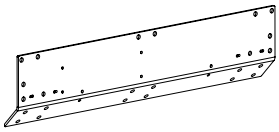
6x	**Cross Beam [STD: 0001369] [MAX: 0002900]**	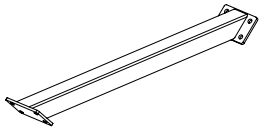
1x	**Front Cross Beam [STD: 0001370] [MAX: 0002899]**	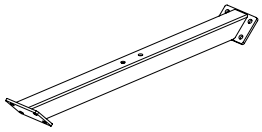
1x	**Axle Cross Beam [STD: 0001679] [MAX: 0002898]**	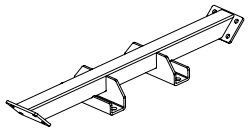
1x	**Left Axle Mount [0001680]**	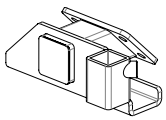
1x	**Right Axle Mount [0001681]**	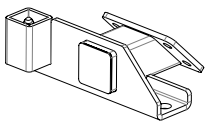

2x	**Knob M10 X 30 mm [0001698]**	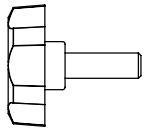
6x	**Jack Mount [0001376]**	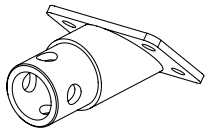
6x	**Swivel Jack [0006798]**	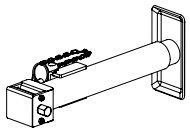
3x	**Swivel Jack Handle [0006800]**	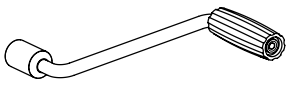
1x	**Left Axle Assembly**	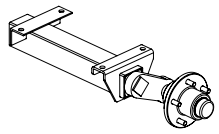
1x	**Right Axle Assembly**	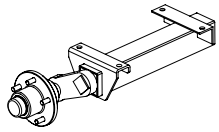
6x	**Axle Shim Plate [0001682]**	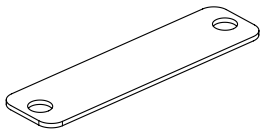
2x	**Wheel [5.30-12]**	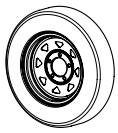
1x	**Tongue [0001371]**	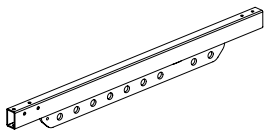

2x	Tongue Bracket [0001372]	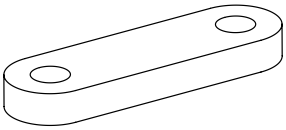
1x	Hitch Ball Coupler (North America) [0001381]	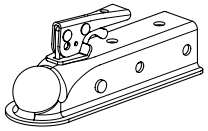
3x	Round Locking Pin [0004728]	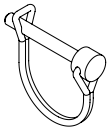
1x	Safety Chain [0001382]	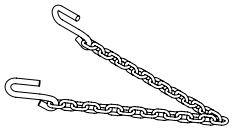
1x	Taillight Bracket [STD: 0001375] [MAX: 0002901]	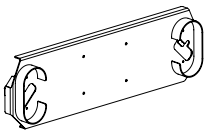
2x	Fender Bracket [0001683]	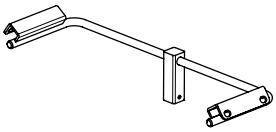
2x	Fender [0001684]	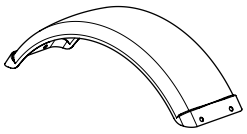
12x	Cable Clamp [0001396]	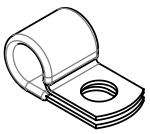
1x	Wiring Harness (North America) [0001676-1]	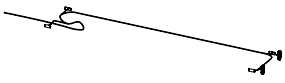
2x	Nameplate [0001886]	
8x	Lock-Down Plate [0001990]	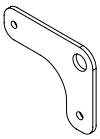

4x	Lock-Down Pin [0001394]	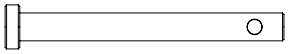
4x	Linch Pin [0004720]	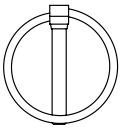
1x	Drill Bit 10 mm [0004742]	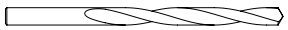
1x	Ratchet Strap [0005146]	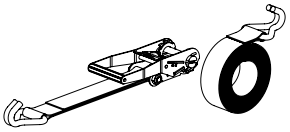
1x	Hitch Ball Coupler (Europe) [0001702]	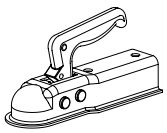
1x	Wiring Harness (Europe) [0001676-2]	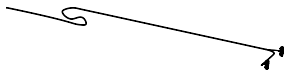
2x	Reflector Bracket (Europe) [0001379]	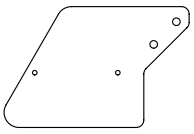
2x	Rear Reflector (Europe) [0001390]	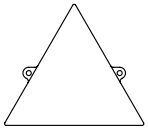
4x	Side Reflector (Europe) [0001391]	
2x	Front Reflector (Europe) [0001392]	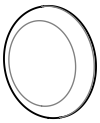

STD = Woodlander (Standard)
MAX = Woodlander™ MAX

Components in RED are specific to European trailers

TO-SCALE HARDWARE

BOLTS & SCREWS

Hardware graphics are printed at 1:1 scale for ease of identification. Simply place the hardware over the image in the tables to verify it is the correct size.

Hardware quantities shown below are the total quantities from both the Woodlander™ trailer and Woodlander™ trailer extension crates.

20x	**HHB-MBE075FCJ**	**M6 X 1 X 20 mm HEX BOLT**
	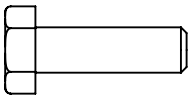	
4x	**HHB-MBE080FCJ**	**M6 X 1 X 25 mm HEX BOLT**
	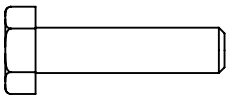	
4x	**HHB-MBE095FCJ**	**M6 X 1 X 40 mm HEX BOLT**
	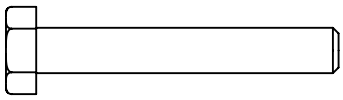	
1x	**HHB-MBM095FCM**	**M10 X 1.5 X 40 mm HEX BOLT**
	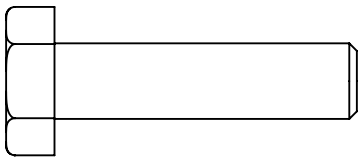	
4x	**HHB-MBM215PCM**	**M10 X 1.5 X 160 mm HEX BOLT**
	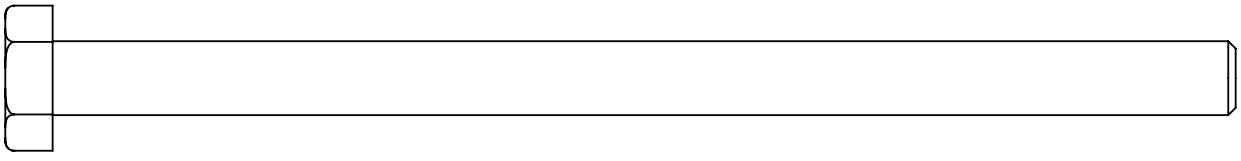	
2x	**HHB-MBR125PCM***	**M12 X 1.75 X 70 mm HEX BOLT**
	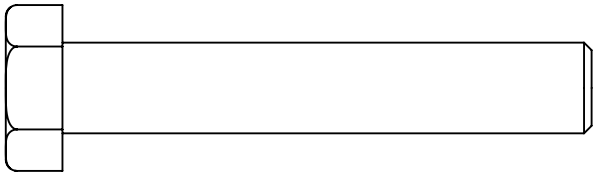	

2x	**HHB-MBR155PCM****	**M12 X 1.75 X 100 mm HEX BOLT**
	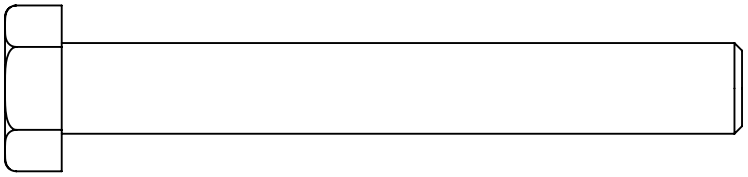	
8x	**FHH-MBJ075FCJ**	**M8 X 1 X 20 mm FLANGED HEX BOLT**
	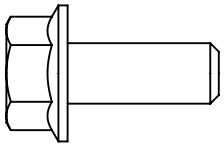	
4x	**FHH-MBJ080FCJ**	**M8 X 1 X 25 mm FLANGED HEX BOLT**
	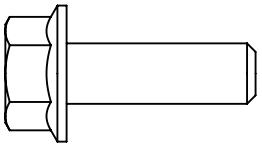	
172x	**FHH-MBM085FCM**	**M10 X 1.5 X 30 mm FLANGED HEX BOLT**
	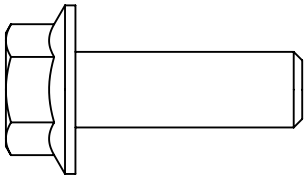	
40x	**FHH-MBM090PCM**	**M10 X 1.5 X 35 mm FLANGED HEX BOLT**
	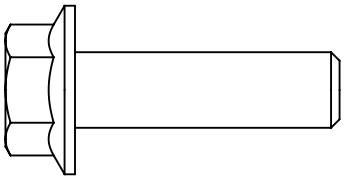	
16x	**FHH-MBM095PCM**	**M10 X 1.5 X 40 mm FLANGED HEX BOLT**
	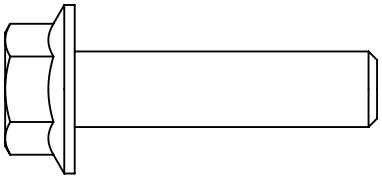	

8x	FHH-MBR090PCM	M12 X 1.75 X 35 mm FLANGED HEX BOLT
	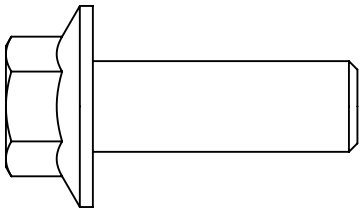	
8x	PPH-MBA075FCE***	M5 X 0.8 X 20 mm PHILLIPS PAN HEAD SCREW
	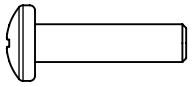	

*** M12 X 1.75 X 70 mm Hex Bolts not applicable on European trailers**
**** M12 X 1.75 X 100 mm Hex Bolts not applicable on North American trailers**
***** M5 X 0.8 X 20 mm Phillips Pan Head Screw quantity 12x on European trailers**

SCALES

Ruler scales are also provided below to double-check bolt and screw lengths when necessary.



CENTIMETRES / MILLIMETRES



INCHES

WASHERS

32x	FTW-MBE000AJ M6 FLAT WASHER
	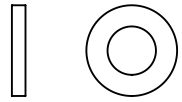

6x	FTW-MBM000AJ M10 FLAT WASHER
	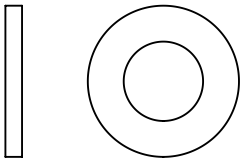

NUTS

10x	0006202 M12 X 1.5 LUG NUT
	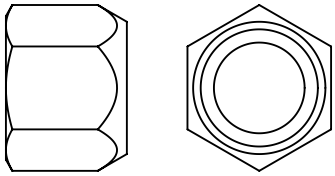
5x	HLN-MBMCL M10 X 1.5 LOCK NUT
	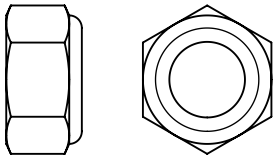
8x	FLN-MBACH M5 X 0.8 FLANGED LOCK NUT*
	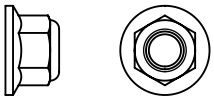
228x	FLN-MBMCL M10 X 1.5 FLANGED LOCK NUT
	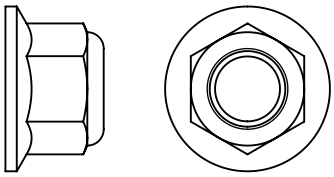

28x	HLN-MBECH M6 X 1 LOCK NUT
	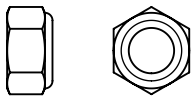
2x	HLN-MBRCL M12 X 1.75 LOCK NUT
	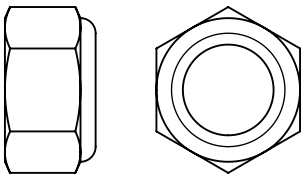
12x	FLN-MBJCH M8 x 1 FLANGED LOCK NUT
	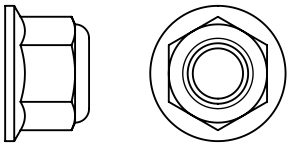
8x	FLN-MBRCL M12 X 1.75 FLANGED LOCK NUT
	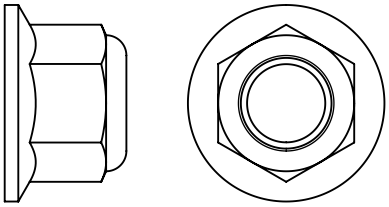

*** M5 X 0.8 Flanged Lock Nut quantity 14x on European trailers**

SAWMILL COMPONENTS

These components from the sawmill and sawmill track extension crates are required to build the trailer. They do not ship with the Woodlander™ XL trailer.

6x	**Track Rail [0001073]**	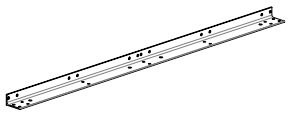
4x	**Reinforcement Plate [0001072]**	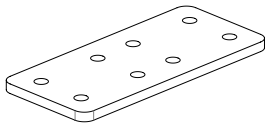
4x	**Carriage Stop [0001055]**	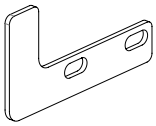
5x	**T-Bolt M10 X 40 mm [0001059]**	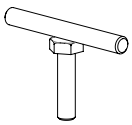

2x	**Centre Bunk [0001084]**	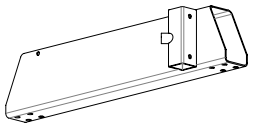
3x	**Mid Bunk [0001080]**	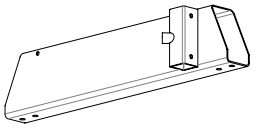
2x	**End Bunk [0001075]**	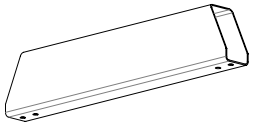

SAWMILL HARDWARE

None of the hardware from the sawmill is used to build the trailer with the exception of the log support hardware listed below.

10x	**FHH-MBM080FCM M10 X 1.5 X 25 mm FLANGED HEX BOLT**
	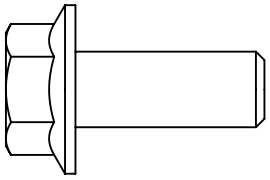

10x	**HXN-MBMCH M10 X 1.5 HEX NUT**
	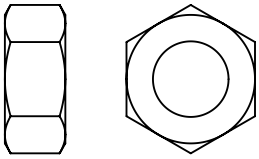

See section, ***LOG SUPPORTS***, under ***TRACK ASSEMBLY*** in the Sawmill Operator's Manual for information on how to install this hardware.

TRAILER ASSEMBLY

1. TOOLS REQUIRED

Tool	Specification
Phillips Head Screwdriver	No. 3
Wrench/Socket	8 mm
Wrench/Socket	9 mm
Wrench/Socket	10 mm
Wrench/Socket	13 mm
Wrench/Socket	14 mm
Wrench/Socket	15 mm
Wrench/Socket	18 mm
Adjustable Wrench	Variable
Torque Wrench	Capable of 93 ft•lb [126 N•m]
Drill	Corded or cordless

2. TRACK RAILS, JOINING GUSSETS, MID BUNK

Using the hardware listed below, assemble the gussets to the track as shown on the next page. Torque all bolts per the table in section ***BOLT TORQUE SPECIFICATIONS***.

12x	M10 X 30 mm Flanged Hex Bolt	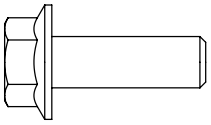	1x	Mid Bunk	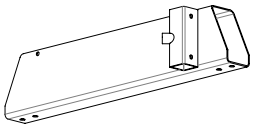
12x	M10 Flanged Lock Nut	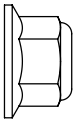	4x	Reinforcement Plate	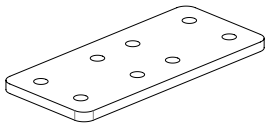
2x	Track Rail	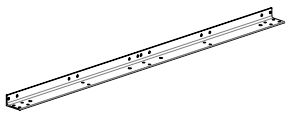	2x	Joining Gusset	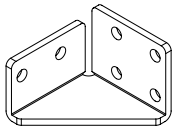

Track components listed in these tables are *not* included with the trailer package, namely track rails, reinforcement plates, bunks, and carriage stops. These components are found in the sawmill crate. If the trailer was purchased for an existing sawmill (i.e. the sawmill is currently assembled), the track will need to be disassembled prior to building the trailer.

When assembling the track, ensure the gussets are flush with the track rails as shown in the graphic below. Measure diagonally to check for squareness.

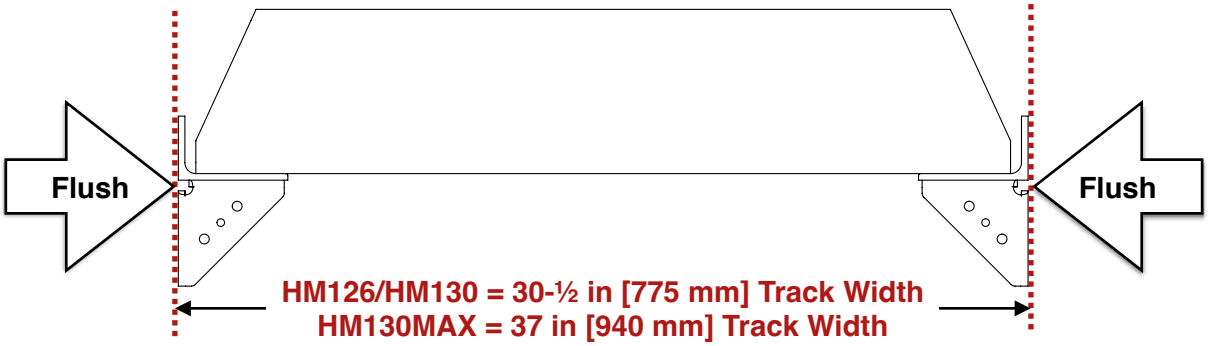

Use the fasteners included with the sawmill trailer to assemble the track. The fasteners included with the sawmill track will *not* be used.

Using the shipping crate as an assembly aid, lay two (2) 2X4s across the top the crate near each end. Position the track/gusset assembly on the 2X4s, ensuring it is centred end-to-end. The 2X4s need to be long enough to support the track rails but shorter than the track is wide.

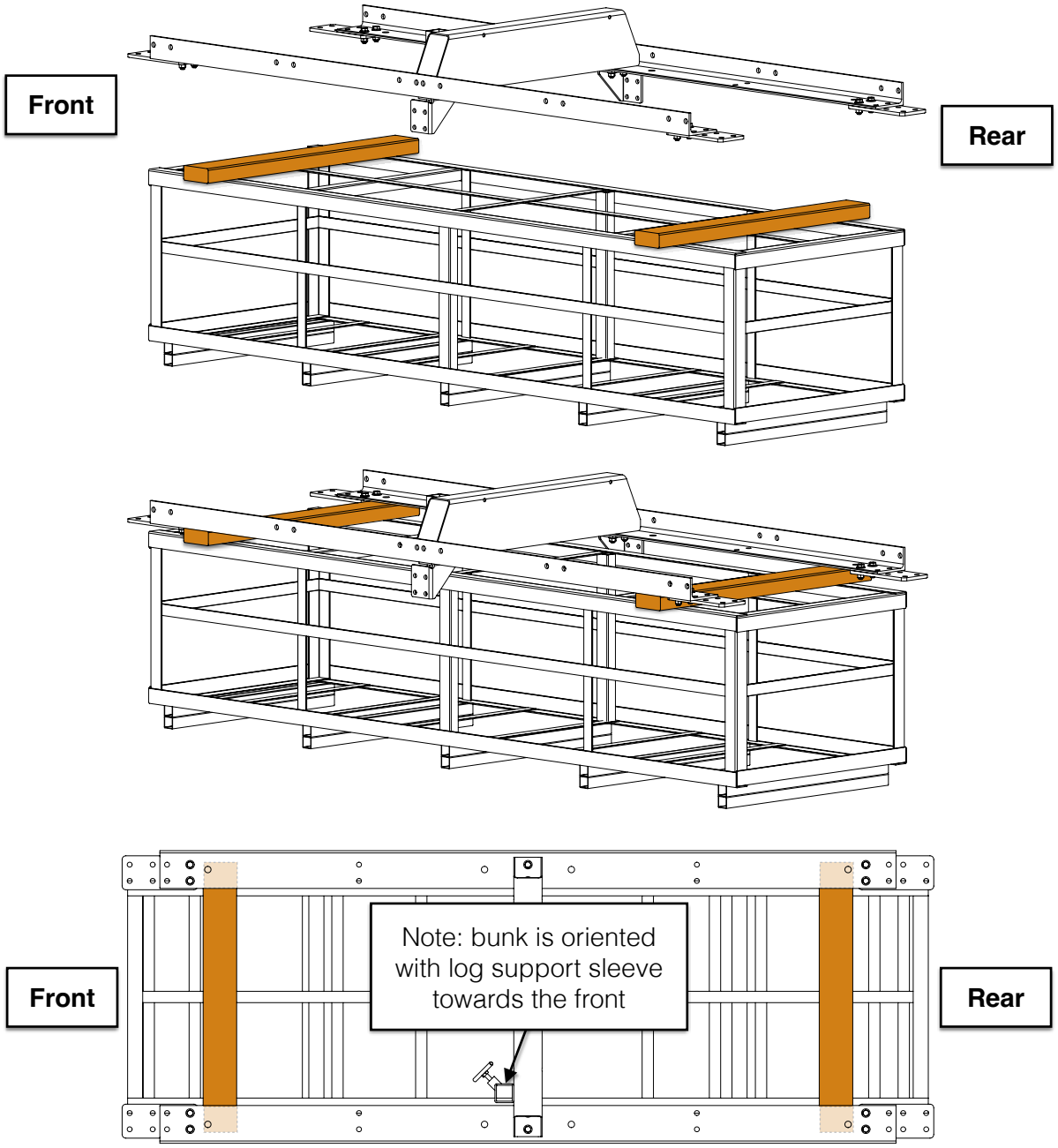

For either the HM126 or HM130, use 30 in [762 mm] long 2X4s. Use 36 in [914 mm] long 2X4s for the HM130MAX.

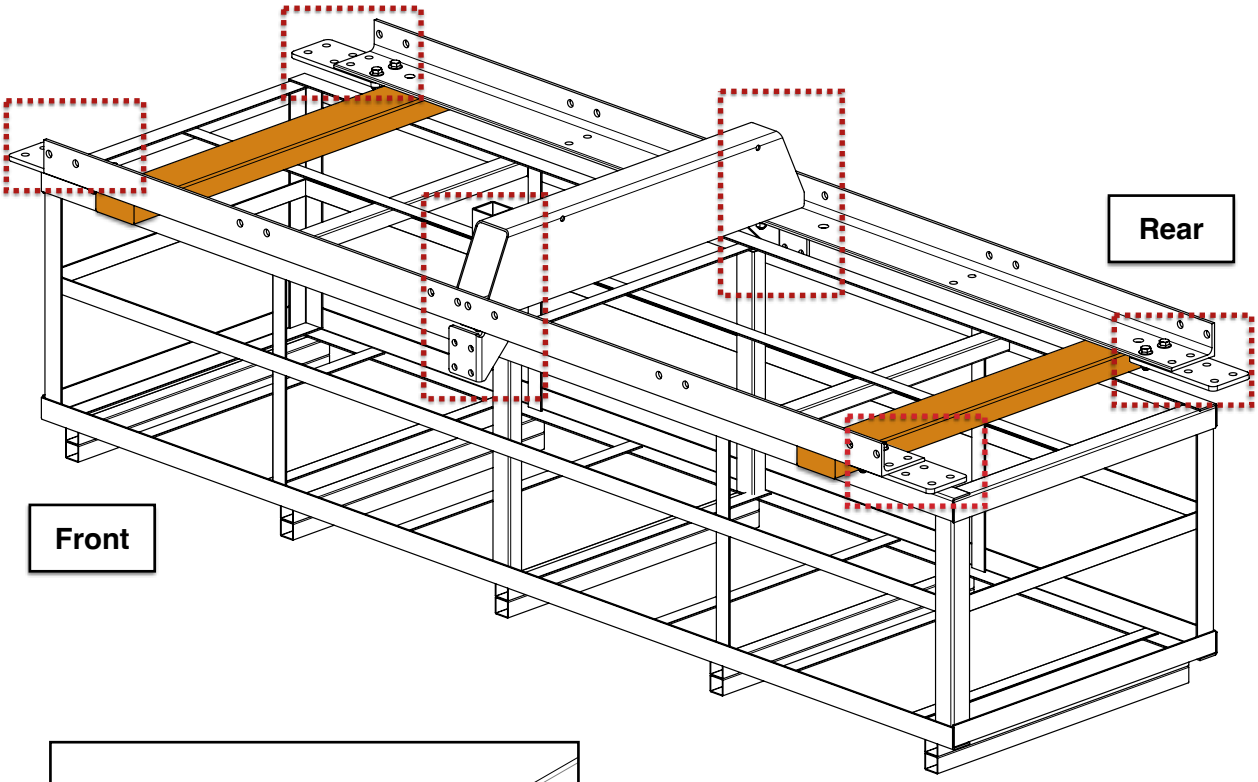
Rear
Front

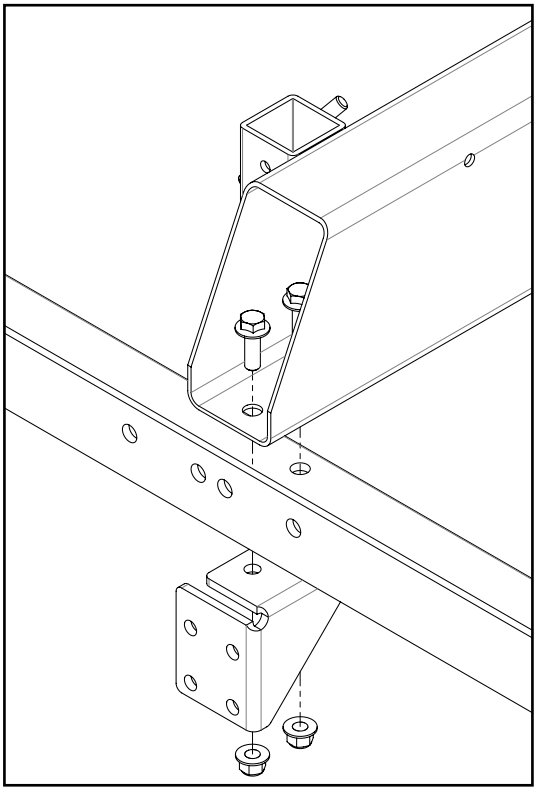

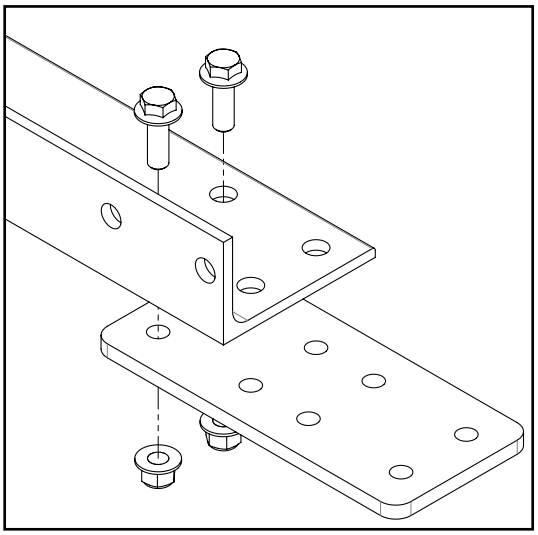

3. LONG SIDE PLATES, JOINING GUSSETS

Using the hardware listed below, hang the long side plates on the centre track section. Snug the bolts up, but leave them loose enough to move the plates.

40x	M10 X 30 mm Flanged Hex Bolt	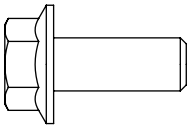	4x	Long Side Plate	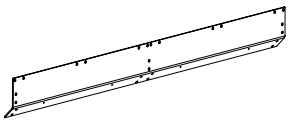
40x	M10 Flanged Lock Nut	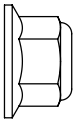	4x	Joining Gusset	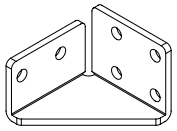

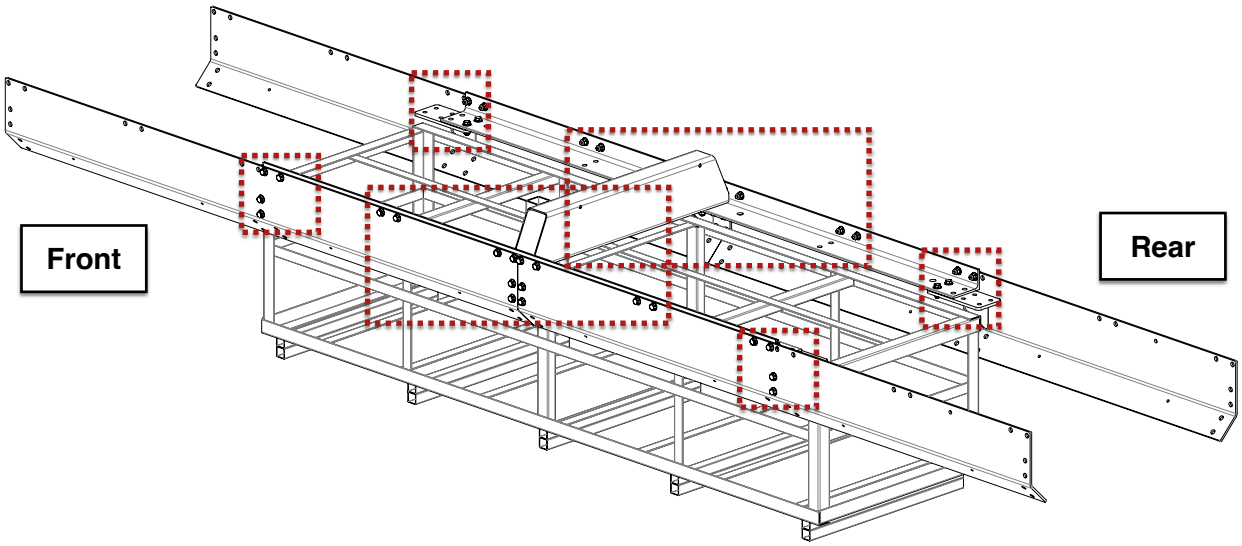

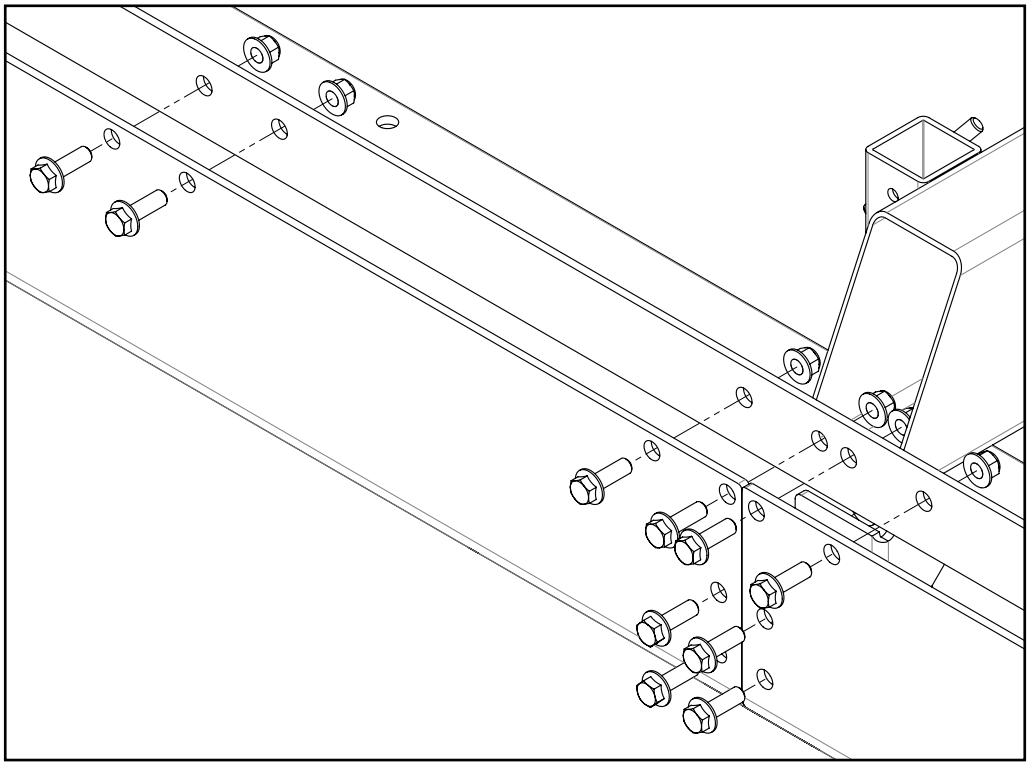

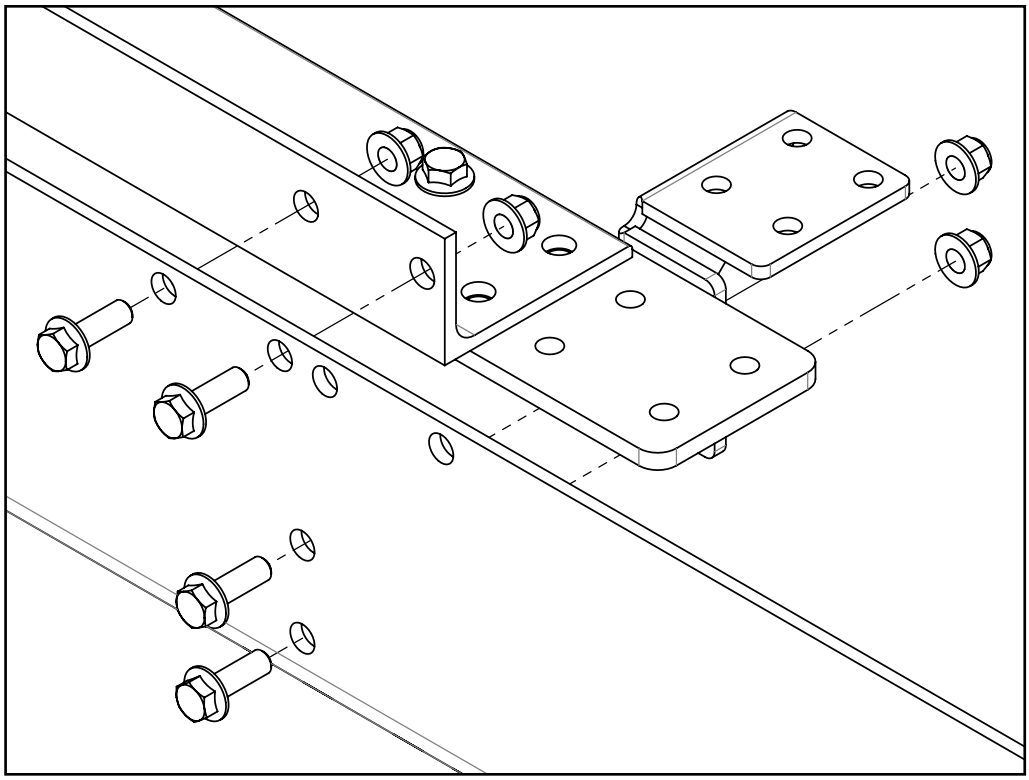

4. TRACK RAILS, END BUNKS, END GUSSETS

Using the hardware listed below, add the remaining track sections and end bunks. Leave the bolts loose.

40x	M10 X 30 mm Flanged Hex Bolt	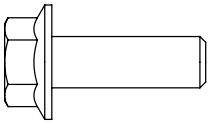	2x	End Bunk	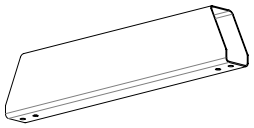
40x	M10 Flanged Lock Nut	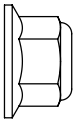	4x	End Gusset	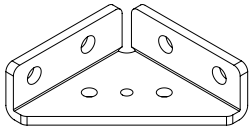
			4x	Track Rail	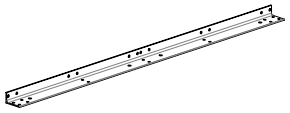

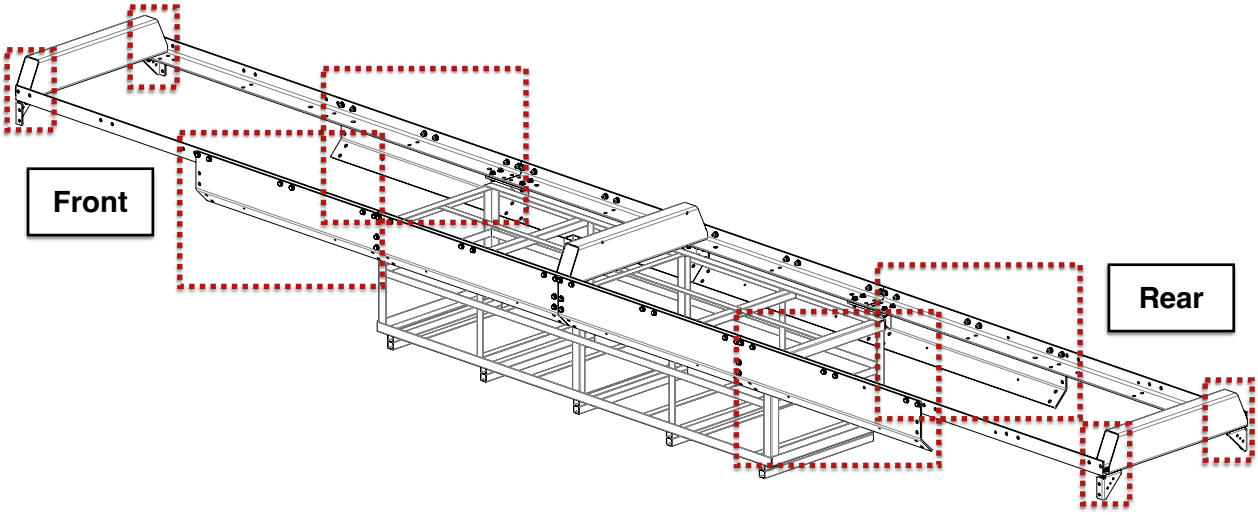

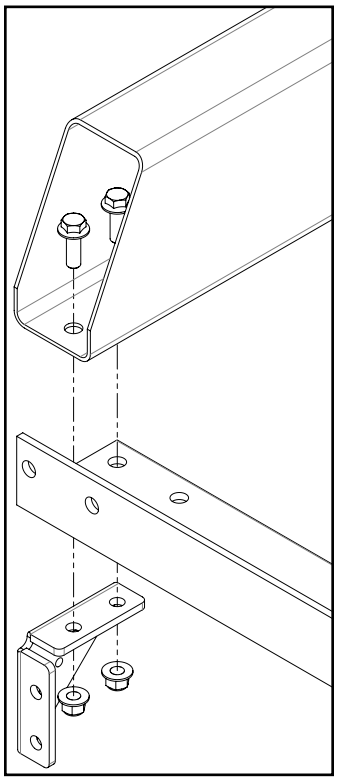

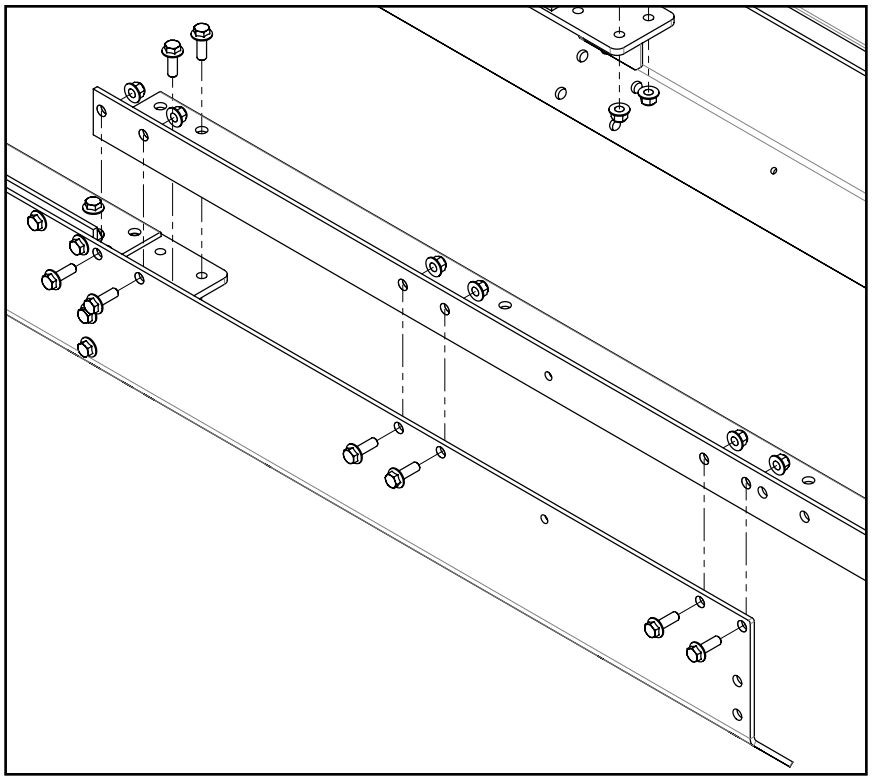

5. SWIVEL JACKS [TEMPORARY]

Using 4 swivel jacks, place 2 under each end bunk and level the assembly while still using the crate as support in the middle. Measure diagonally to check for squareness. Tighten all of the vertical track rail bolts. Leave the horizontal bolts that pass through the side plates loose.

4x	Swivel Jack	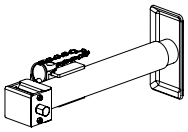		1x [3x]	Swivel Jack Handle	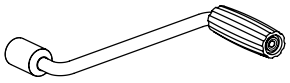

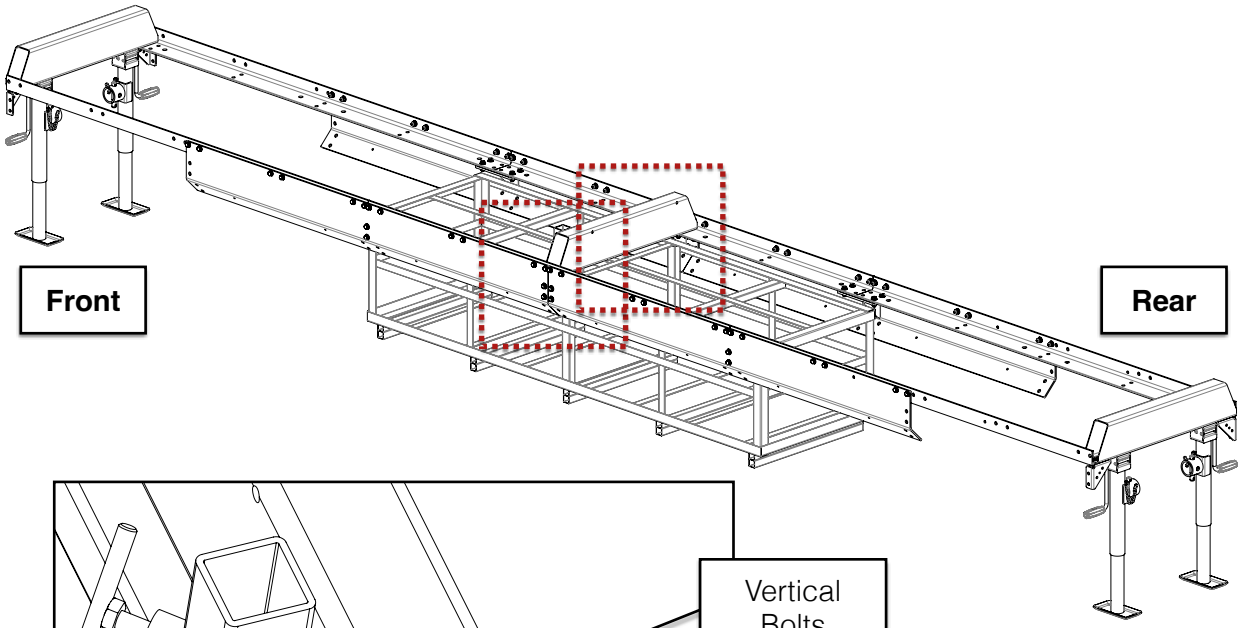

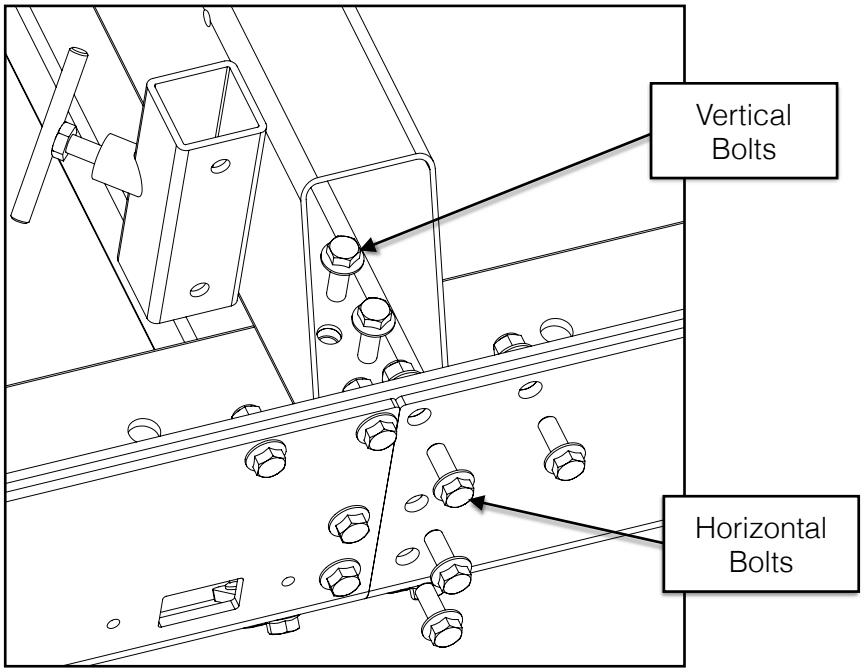

6. CENTRE BUNKS

Using the hardware listed below, install the centre bunks to the track rails and joining gussets. Use eight (8) M10 X 40 mm bolts through each bunk. Tighten the bolts in the order instructed throughout this section.

16x	M10 X 40 mm Flanged Hex Bolt	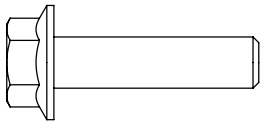	2x	Centre Bunk	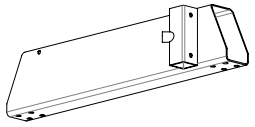
16x	M10 Flanged Lock Nut	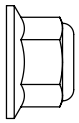			

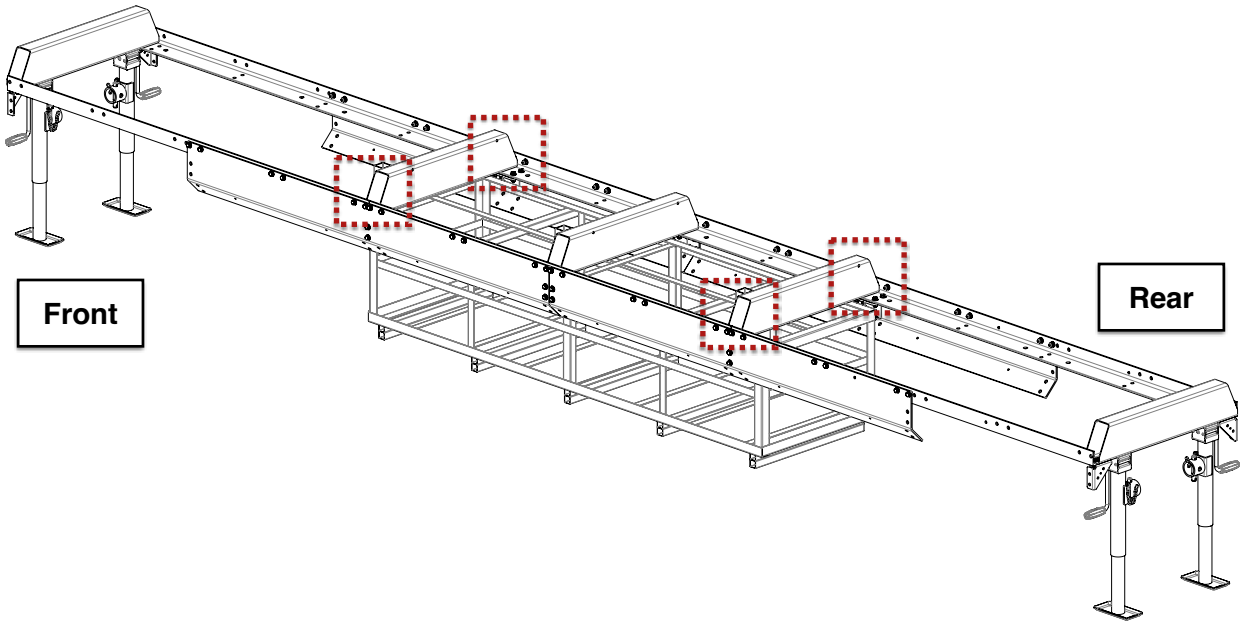

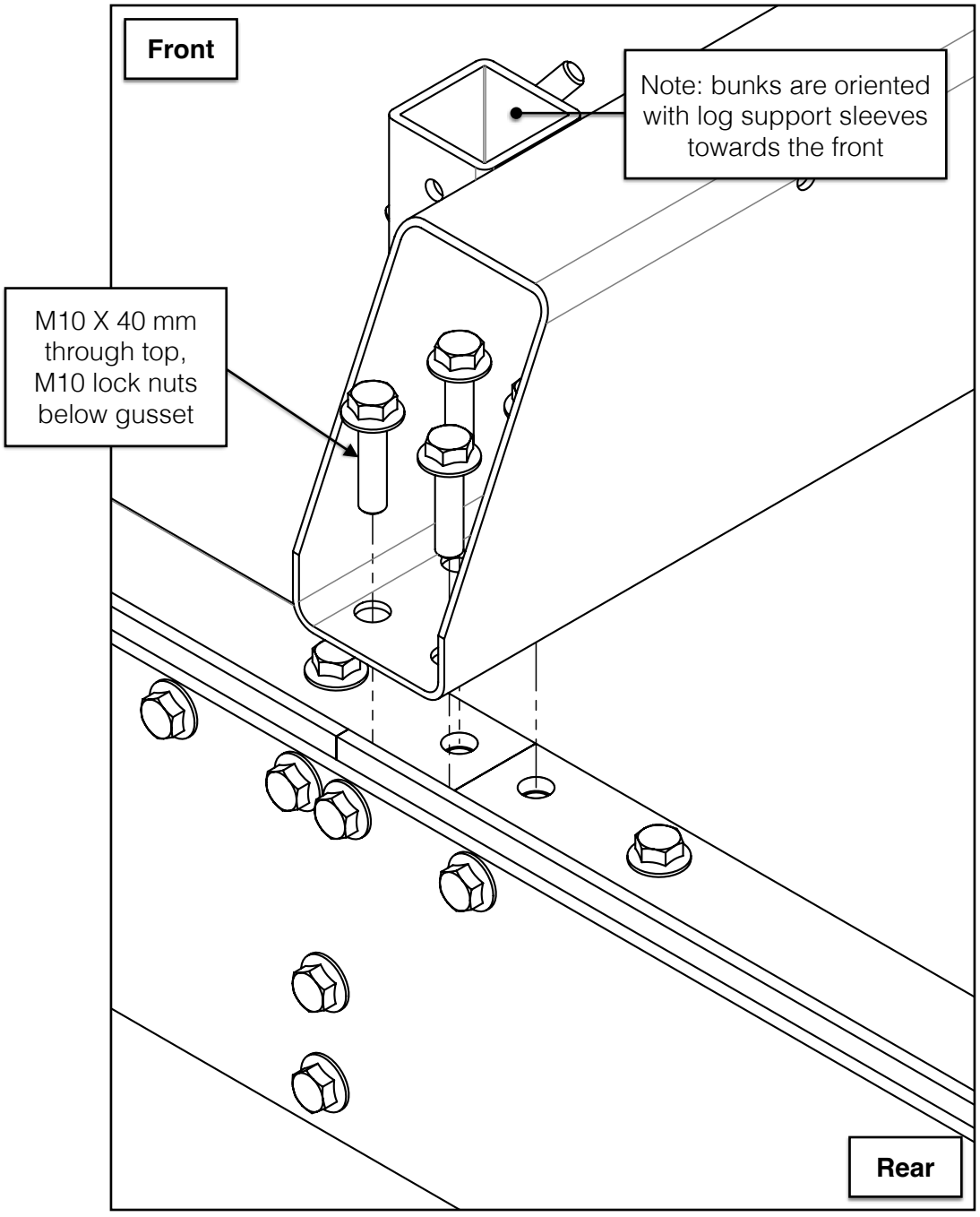
Front
Note: bunks are oriented with log support sleeves towards the front
M10 X 40 mm through top, M10 lock nuts below gusset
Rear

Before torquing the side plate bolts shown through the remainder of this section, verify there is a ⅜-½ in [10-13 mm] uniform offset between the top of the track rails and the top of the side plates. The offset must be uniform along the entire length of the trailer on both sides.

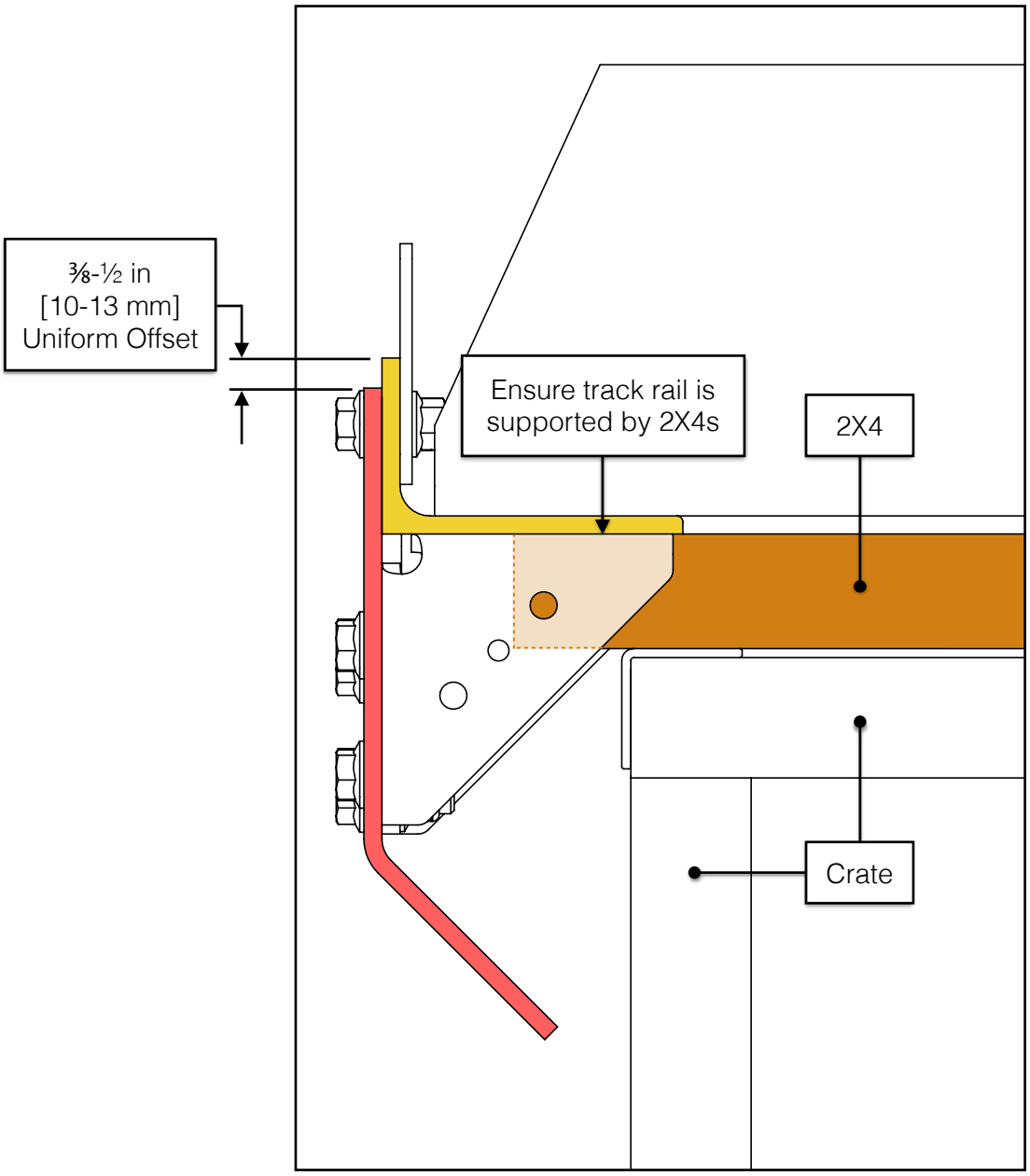

If the offset is not uniform, ensure the track is sitting on the 2X4s and not the crate. The side plates need to hang from the rails unobstructed, with only the force of gravity pulling them down.

Ensuring the side plate-to-rail offset is uniform, tighten and torque *only* the four (4) highlighted bolts securing the *front* long side plate. Do this for both sides of the trailer.

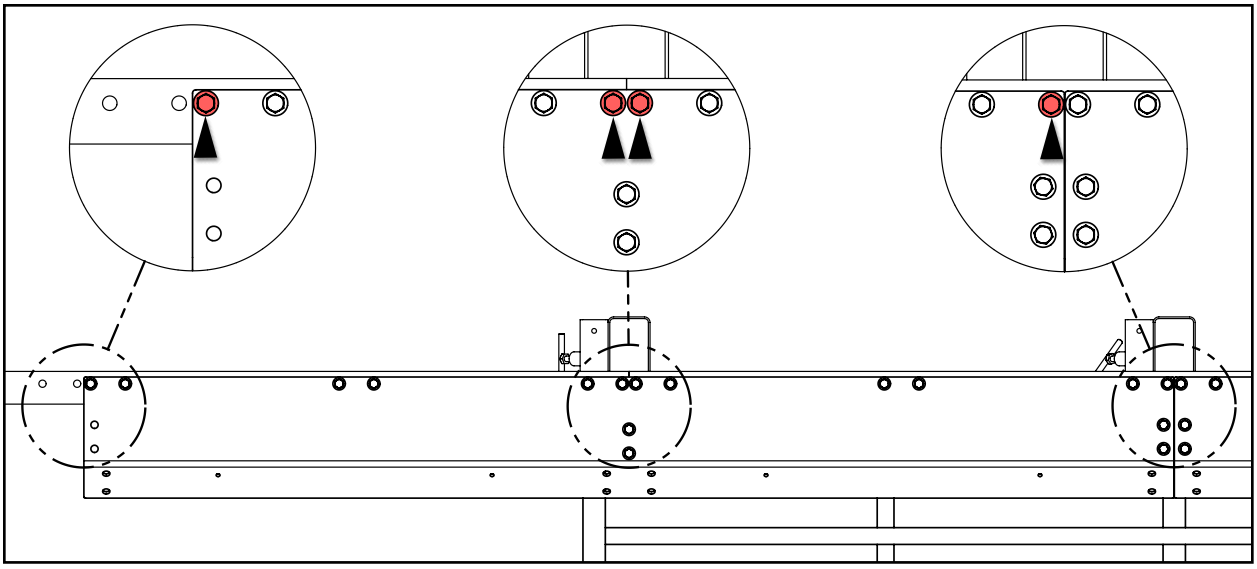

With the front long side plate secured in place, note the gaps (if any) between the rear long side plate and the front long side plate.

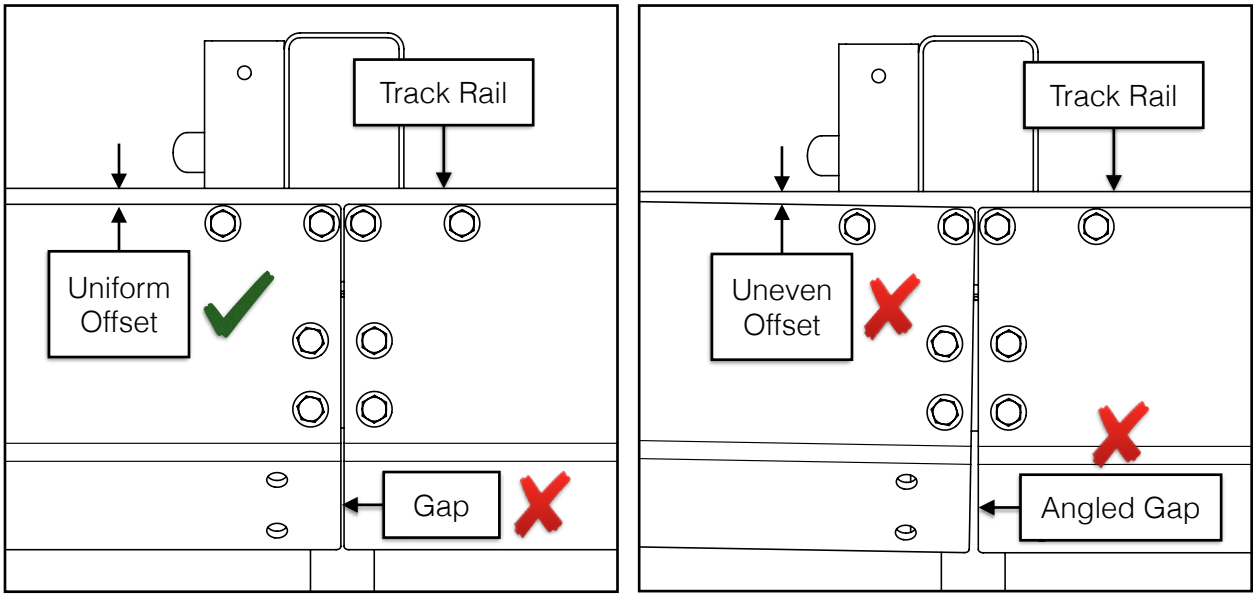

If there are gaps, or if the rear long side plate is not hanging parallel to the top of the track rails, the included ratchet strap can be used to pull the plates together before torquing the bolts as shown on the next page.

Note: If the side plates butt together with no gap, skip to page 21.

Attach the ratchet strap hooks to the lower outer edges the front and rear side plates and pull the sides plates together to help eliminate any gaps. Keep the strap in place until all the side plate bolts are torqued.

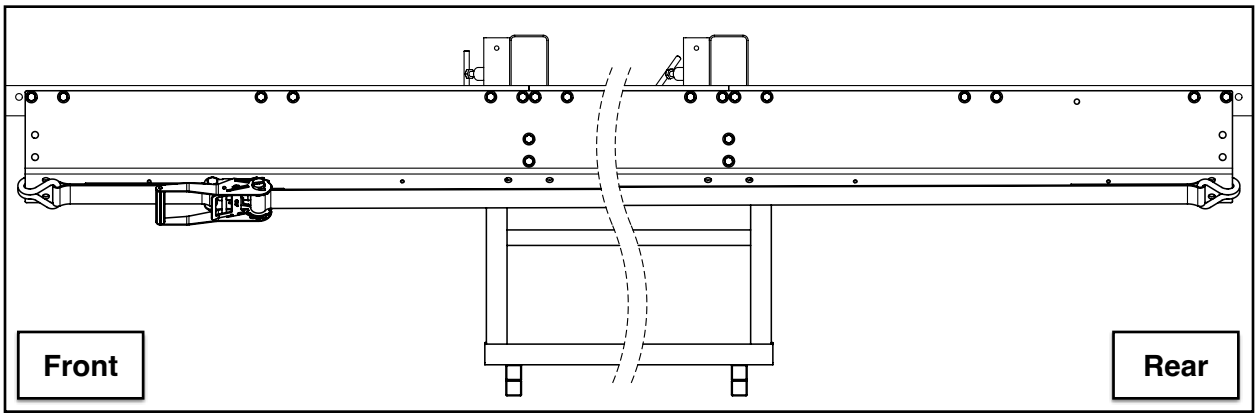

Remember to maintain a uniform offset between the top of the track rails and the top of the side plates when tightening the strap.

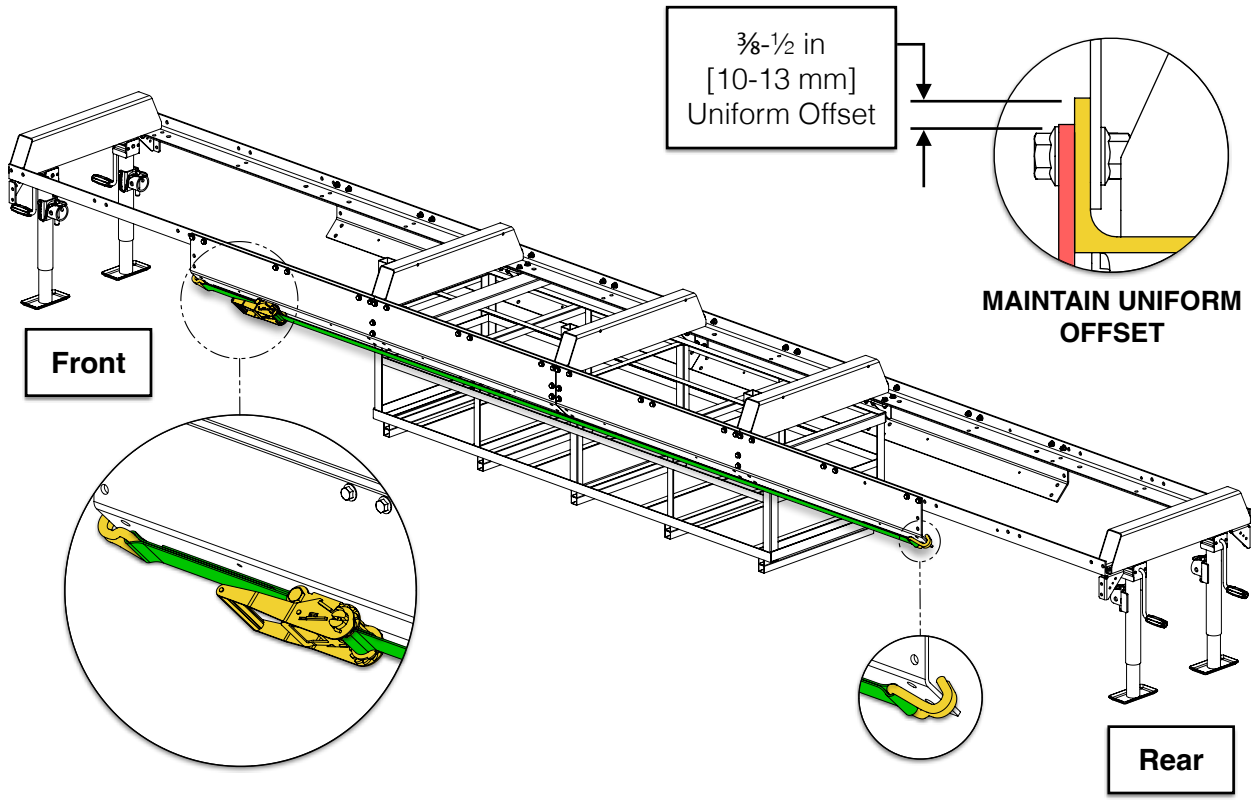

While maintaining a uniform side plate-to-rail offset, torque the remaining bolts per the table in section, ***BOLT TORQUE SPECIFICATIONS***, starting from the centre and working towards the outer ends. Ensure the track is straight, level, and square during this procedure.

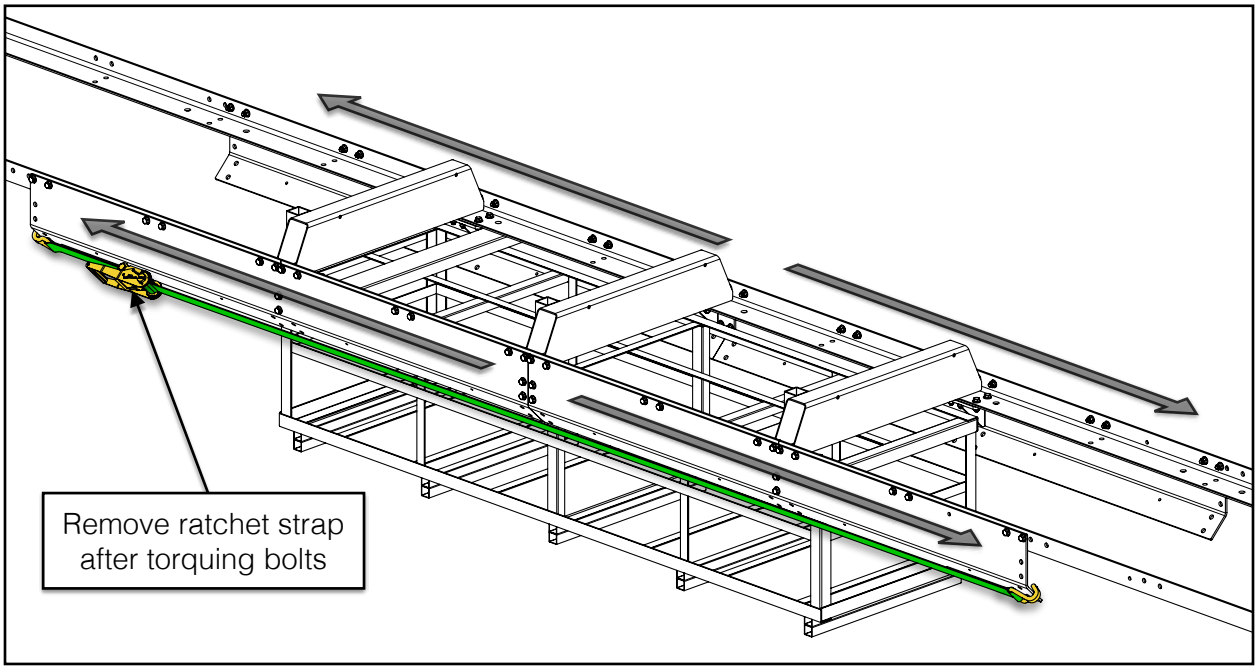

Remove the ratchet strap once all the bolts are tight.

7. MID BUNKS, JOINING GUSSETS

Using the hardware below, install the remaining bunks and gussets. Tighten the bolts in this step.

16x	M10 X 30 mm Flanged Hex Bolt	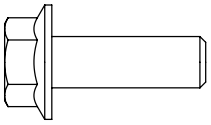	2x	Mid Bunk	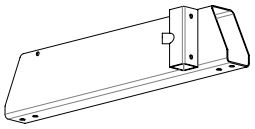
16x	M10 Flanged Lock Nut	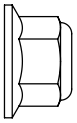	4x	Joining Gusset	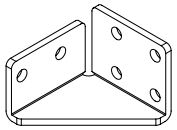

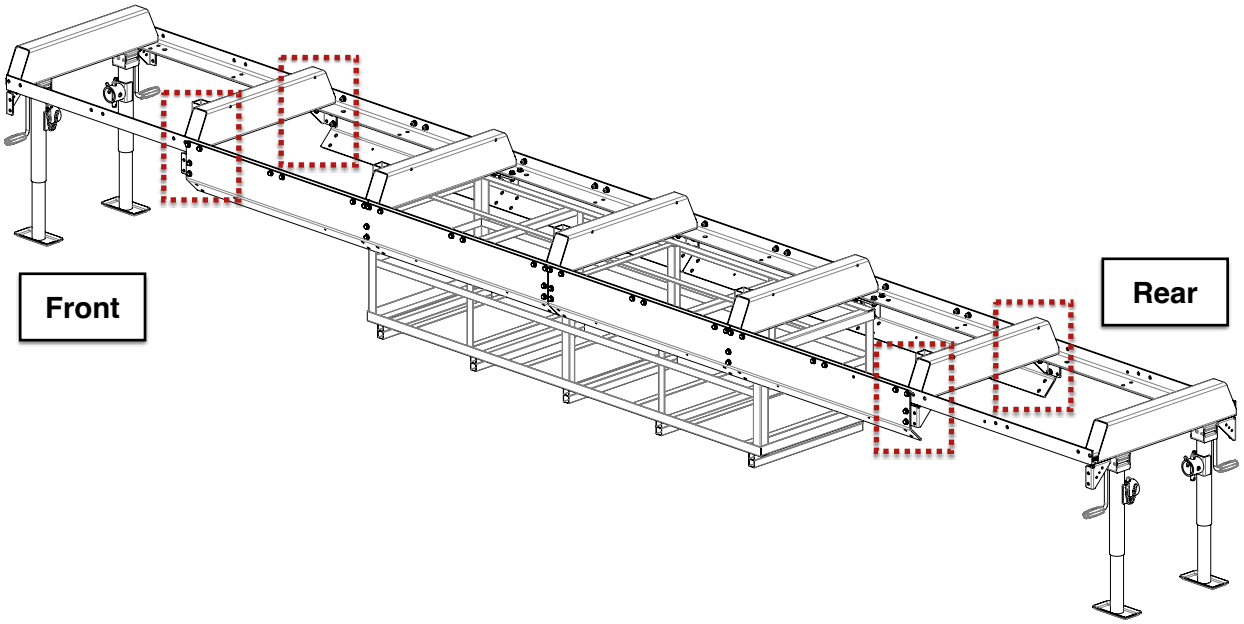

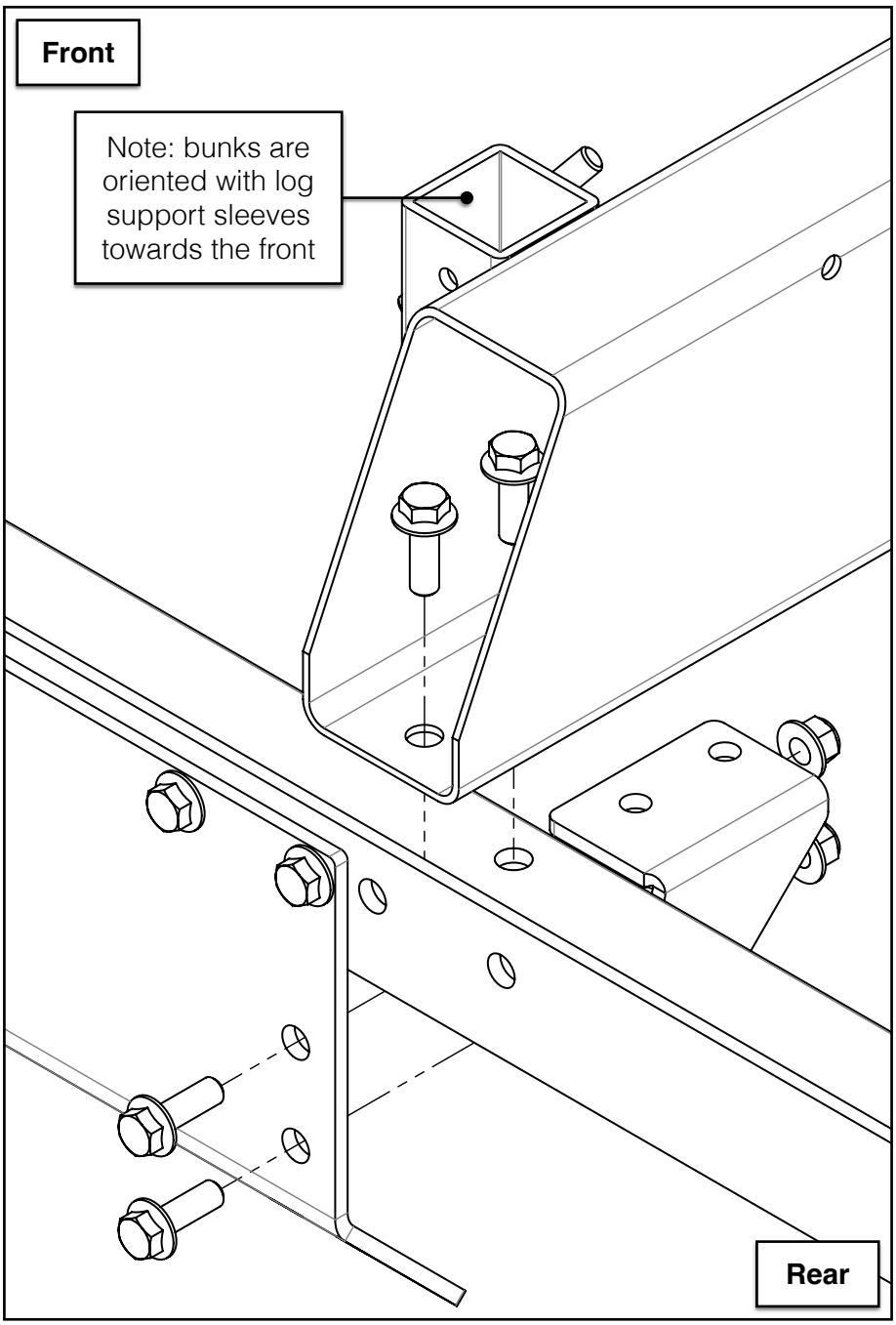
Front
Note: bunks are oriented with log support sleeves towards the front
Rear

8. SHORT SIDE PLATES, CARRIAGE STOPS

Using the hardware listed below, install the short side plate and carriage stops. The M10 X 35 mm bolts are used at the 4 carriage stop locations. Tighten all of the side plate bolts only when instructed. The carriage stops can be fully adjusted once the sawhead is back on the track.

32x	M10 X 30 mm Flanged Hex Bolt	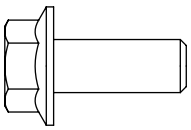	4x	Short Side Plate	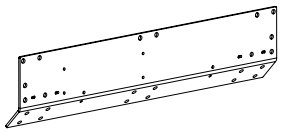
8x	M10 X 35 mm Flanged Hex Bolt	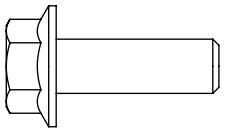	4x	Carriage Stop	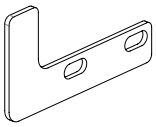
40x	M10 Flanged Lock Nut	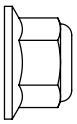			

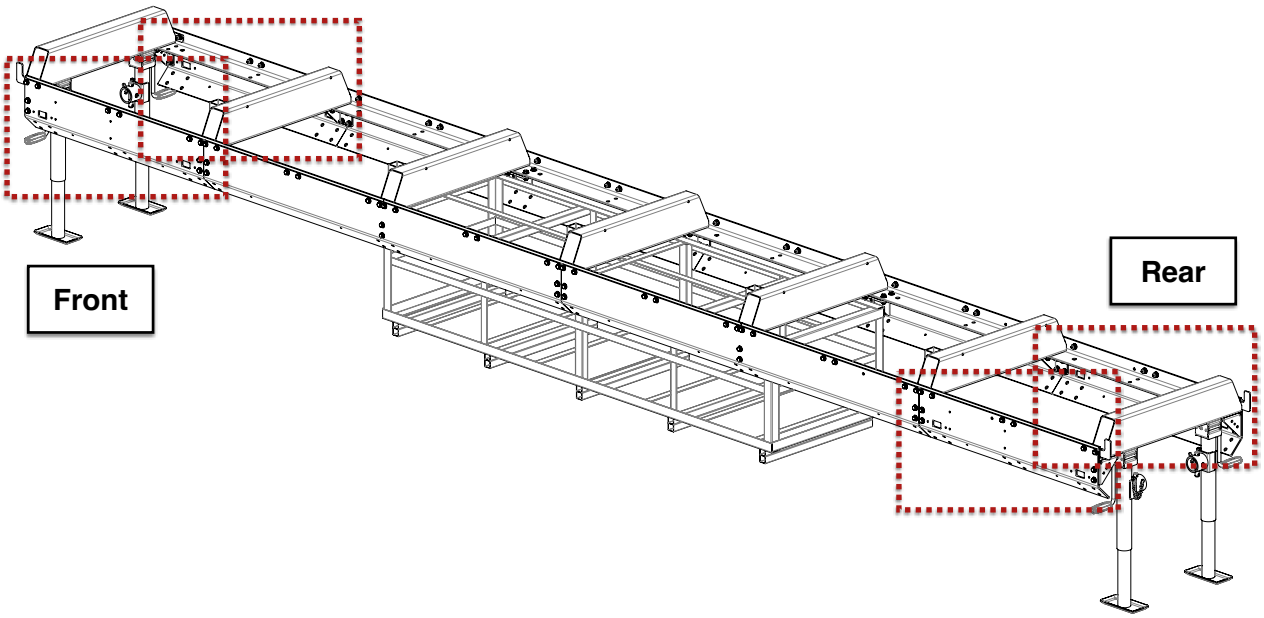

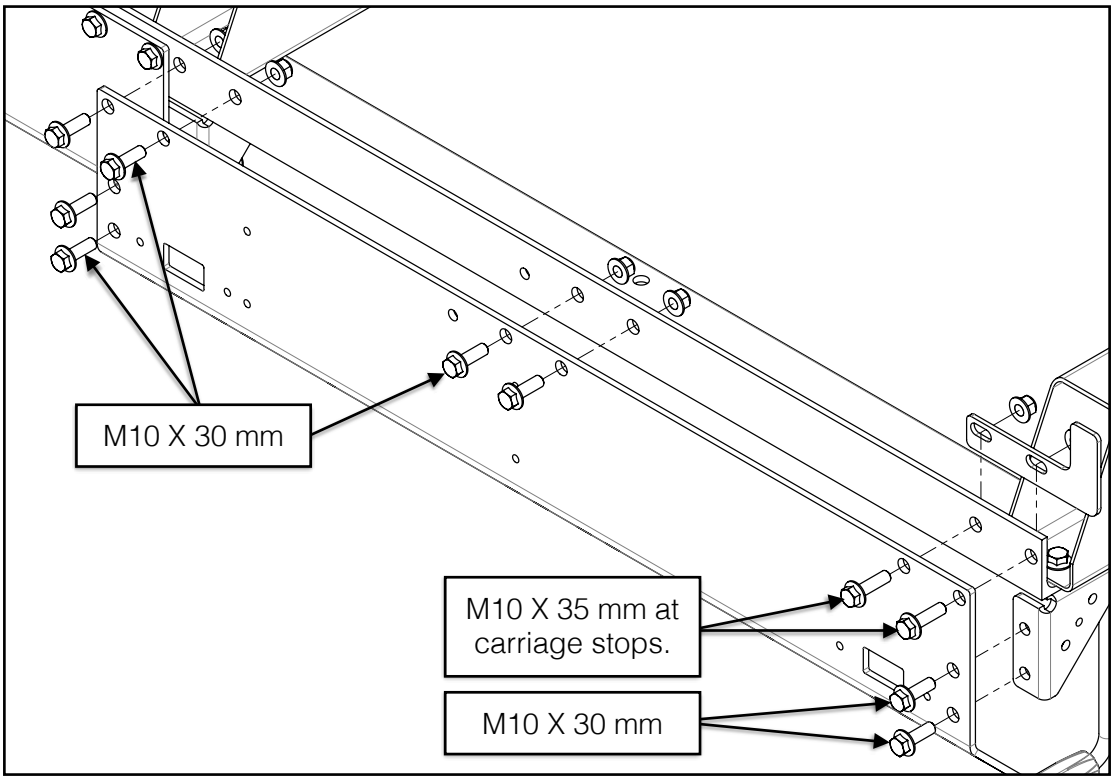

With the long side plates already secured in place, note the gaps (if any) between the short side plates and the long side plates.

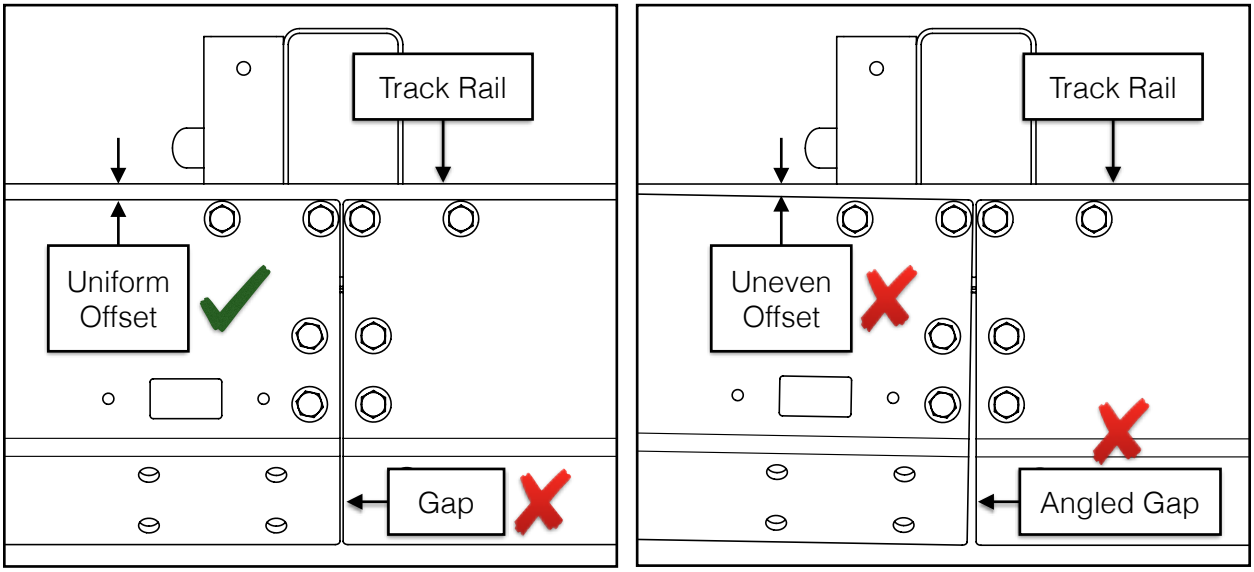

If there are gaps, or if the short side plates are not hanging parallel to the top of the track rails, the included ratchet strap can be used to pull the plates together before torquing the bolts in a similar manner to, ***STEP 6. CENTRE BUNKS***, as shown on the next page.

Attach the ratchet strap hooks to the rectangular openings in the short side plates and pull the sides plates together to help eliminate any gaps. Keep the strap in place until all the bolts are torqued as outlined on the next page.

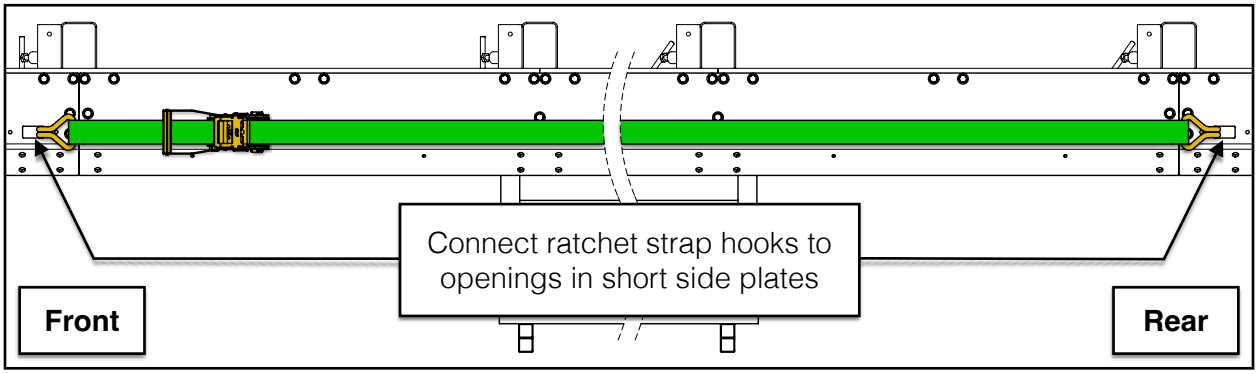

Remember to maintain a uniform offset between the top of the track rails and the top of the side plates when tightening the strap.

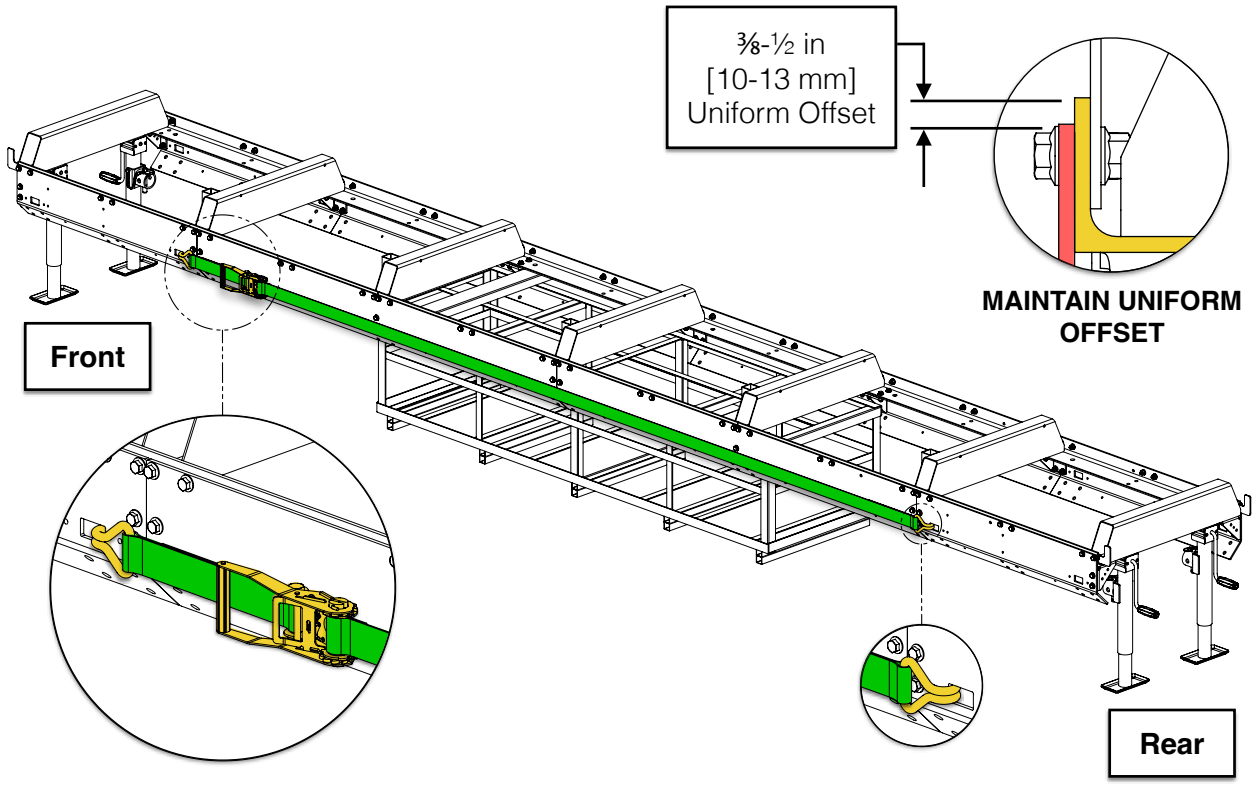

While maintaining a uniform side plate-to-rail offset, torque the remaining bolts per the table in section, ***BOLT TORQUE SPECIFICATIONS***, starting from the centre and working towards the outer ends. Ensure the track is straight, level, and square during this procedure.

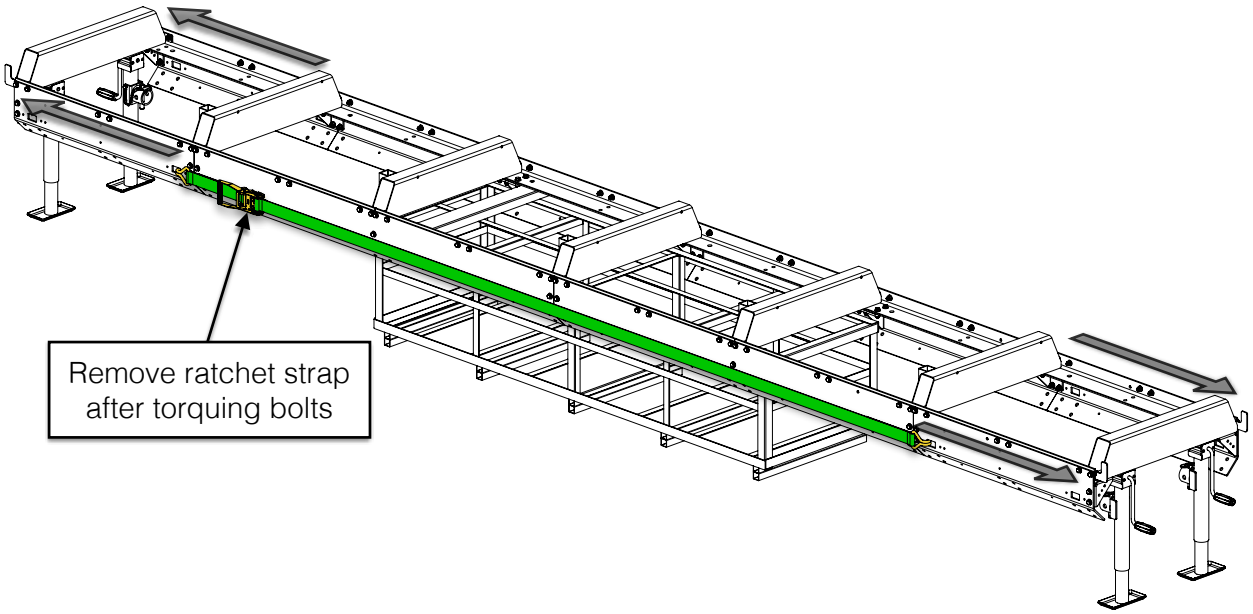

With all of the bolts now tightened, lower the jacks so that the assembly is resting entirely on the crate.

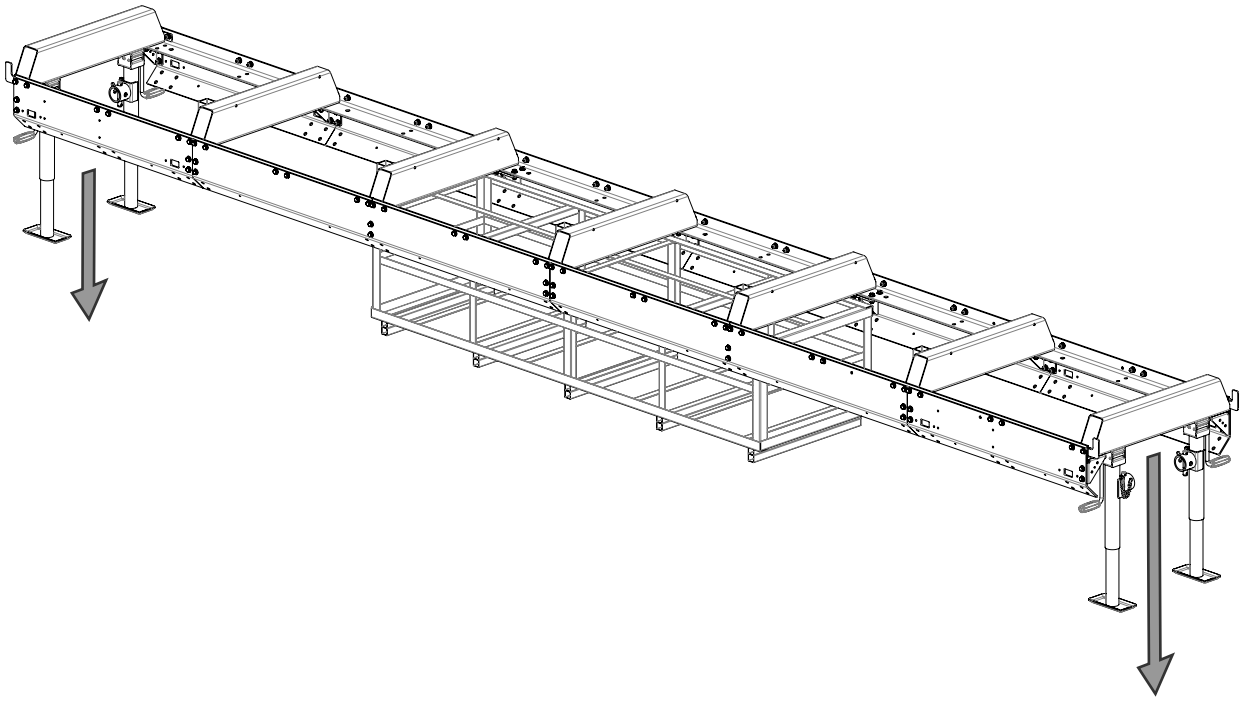

9. CROSS BEAMS, JACK MOUNTS [ENDS]

Using the hardware listed below, install the front and rear jack mounts including 1 cross beam with each pair of mounts. Tighten all bolts. Install swivel jacks on the jack mounts.

16x	M10 X 35 mm Flanged Hex Bolt	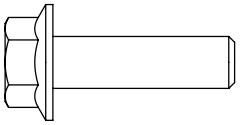	2x	Cross Beam	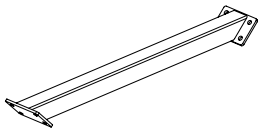
16x	M10 Flanged Lock Nut	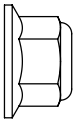	4x	Jack Mount	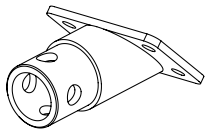
			4x	Swivel Jack	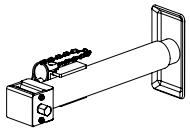
			1x [3x]	Swivel Jack Handle	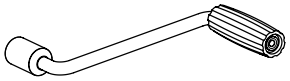

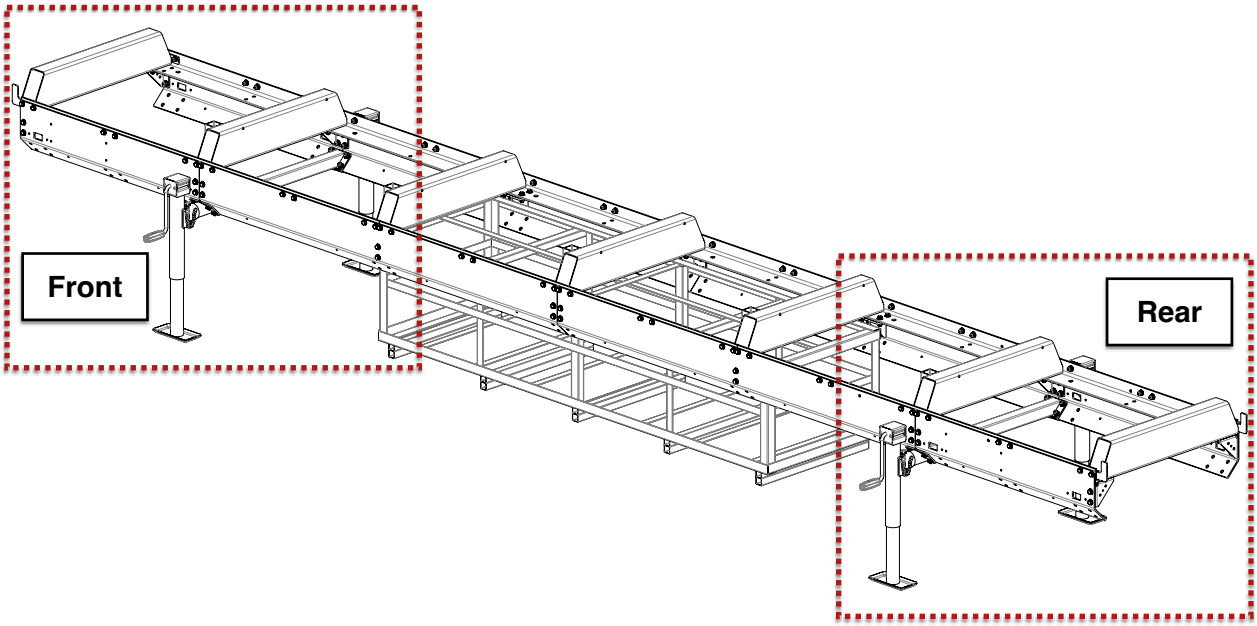

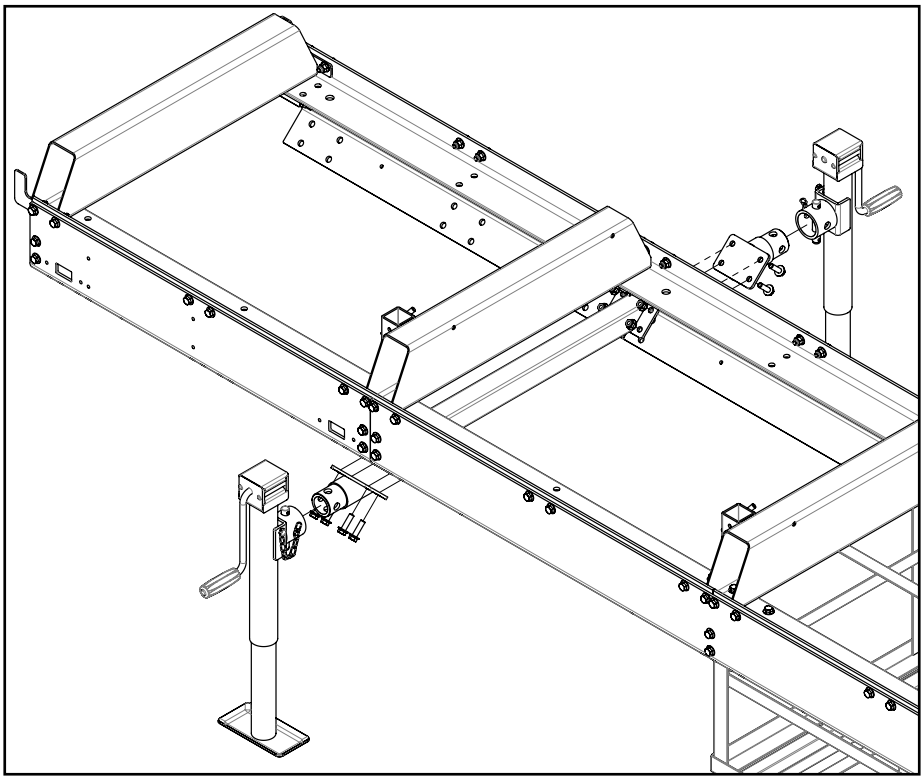

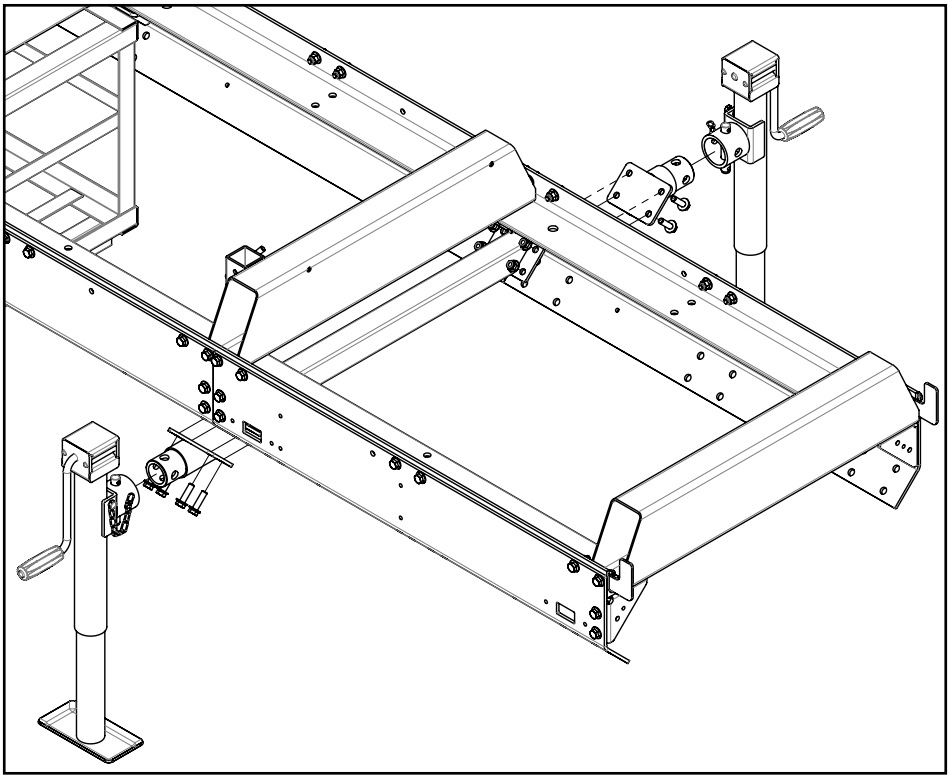

Next, raise the assembly as high as the jacks stands will permit. Pull the crate out from under the assembly once it is sufficiently high enough. It may be necessary to place a block of wood under each jack foot to achieve a sufficient height.

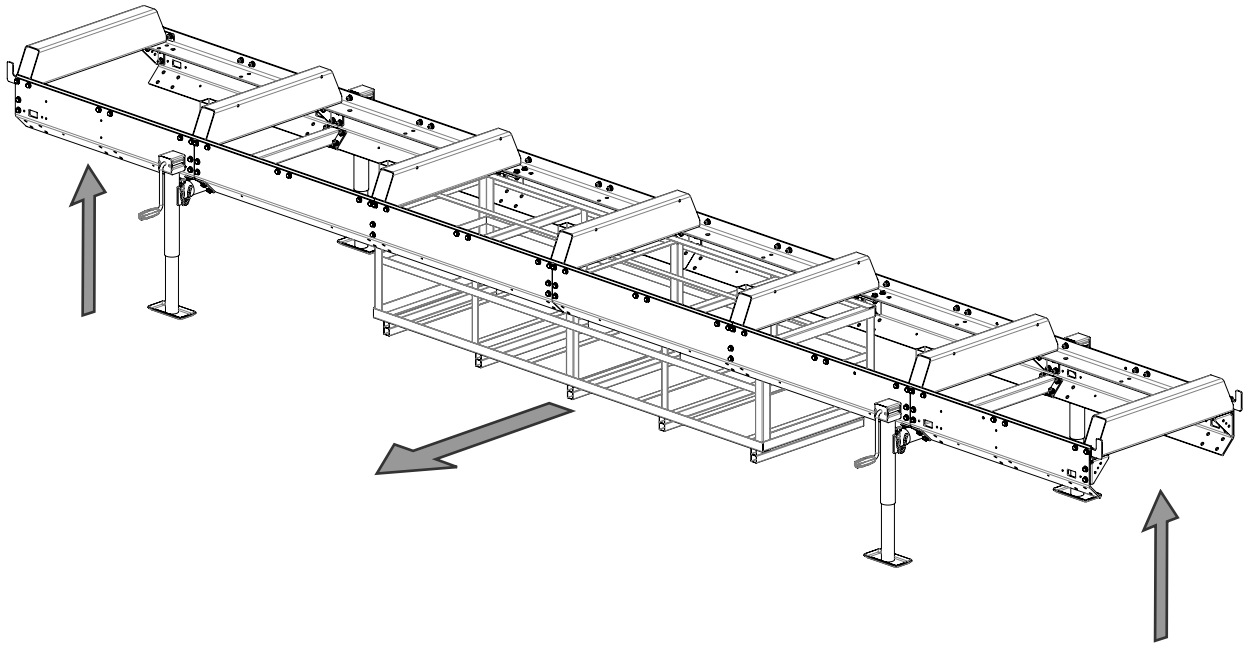

10. CROSS BEAM, JACK MOUNTS [CENTRE]

Using the hardware below, install the centre cross beam and jack mounts. Level the trailer on all six swivel jacks. Tighten all the bolts.

8x	M10 X 35 mm Flanged Hex Bolt	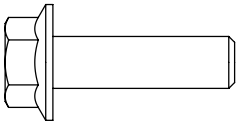	1x	Cross Beam	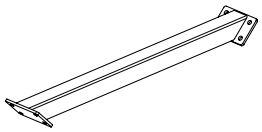
8x	M10 Flanged Lock Nut	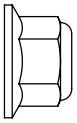	2x	Jack Mount	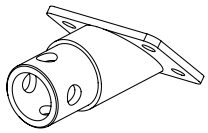
			2x	Swivel Jack	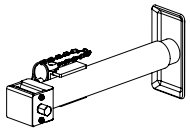
			1x [2x]	Swivel Jack Handle	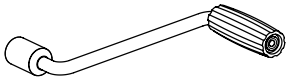

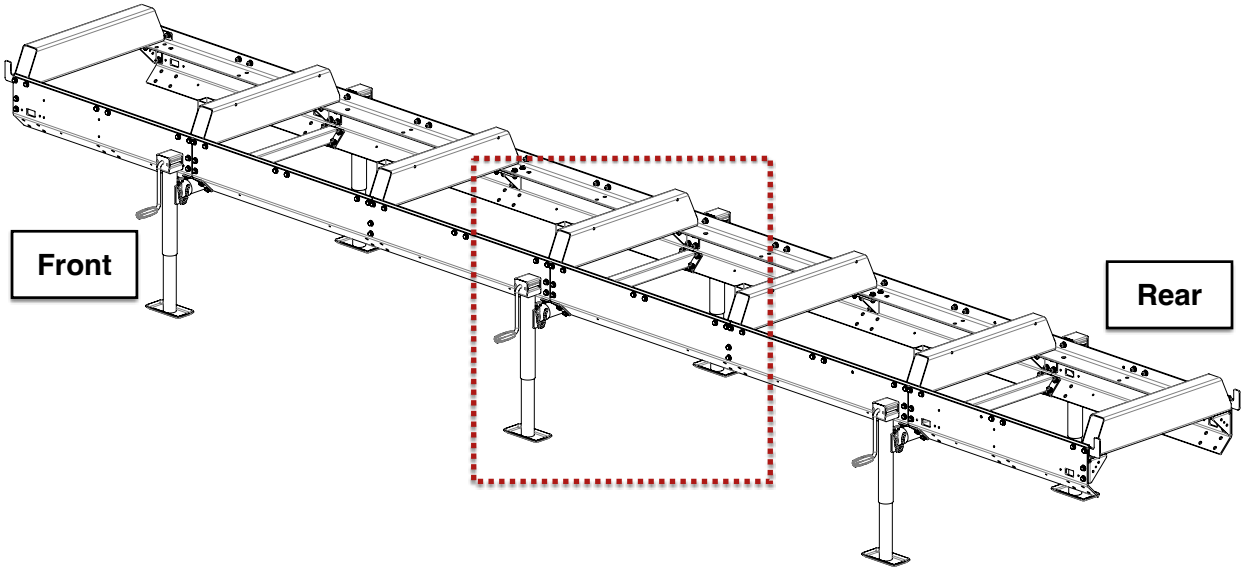

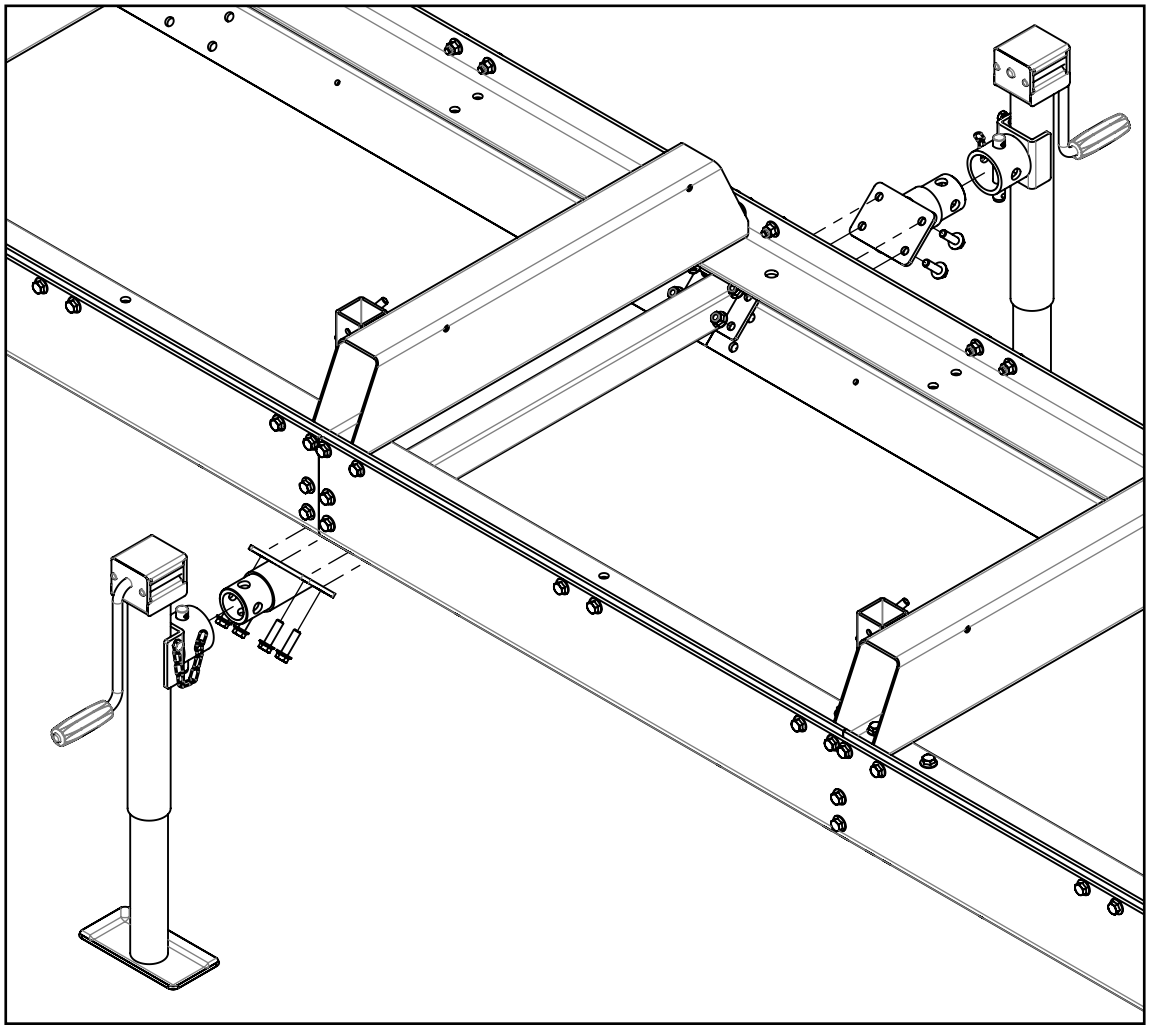

11. CROSS BEAMS, AXLE CROSS BEAM, AXLE MOUNTS

Using the hardware listed below, install the remaining cross beams, the front cross beam (with 2 holes), and axle mount cross beam in the locations shown below. Tighten all bolts.

8x	M10 X 35 mm Flanged Hex Bolt	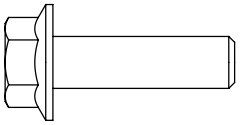	1x	Axle Mount w/ Fender Adapter [Left]	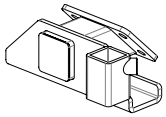
32x	M10 X 30 mm Flanged Hex Bolt	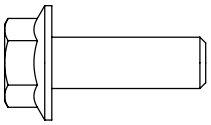	1x	Axle Mount w/ Fender Adapter [Right]	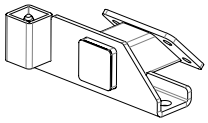
40x	M10 Flanged Lock Nut	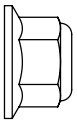	1x	Axle Mount Cross Beam	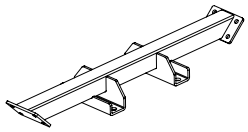
2x	M10 X 30 mm Knob	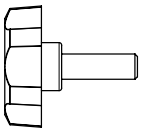	1x	Front Cross Beam	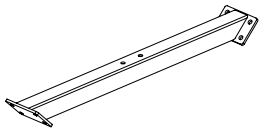
			3x	Cross Beam	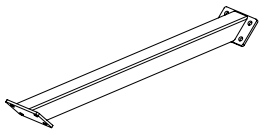

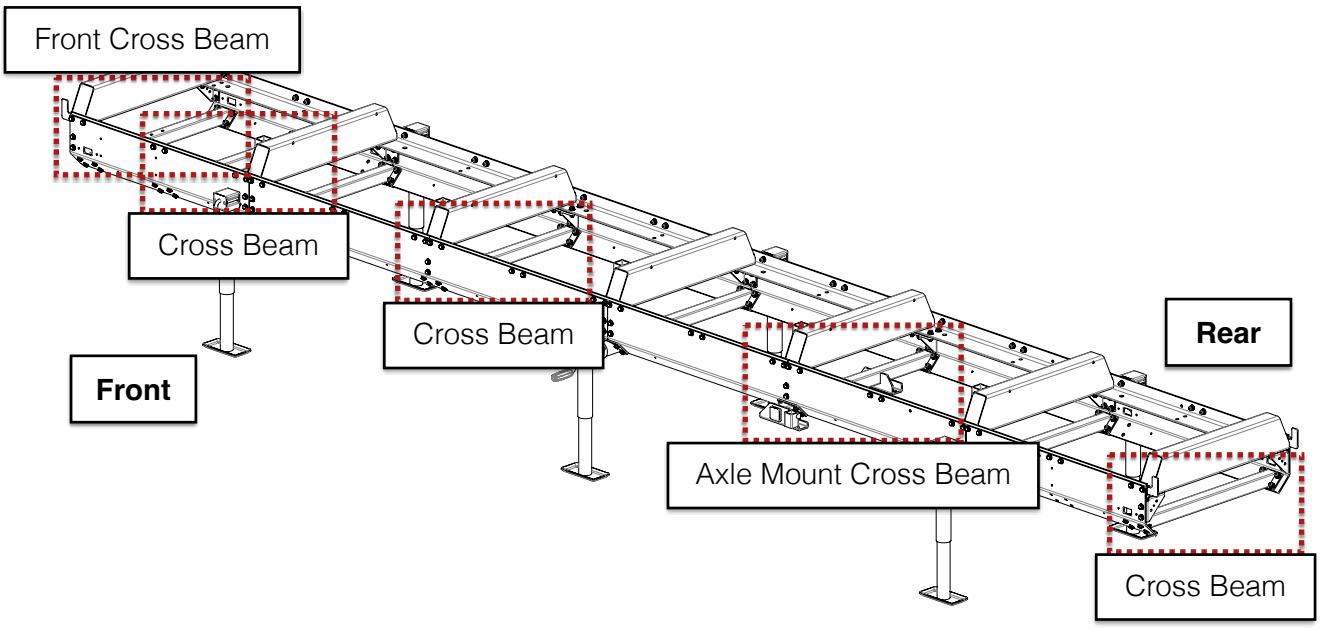

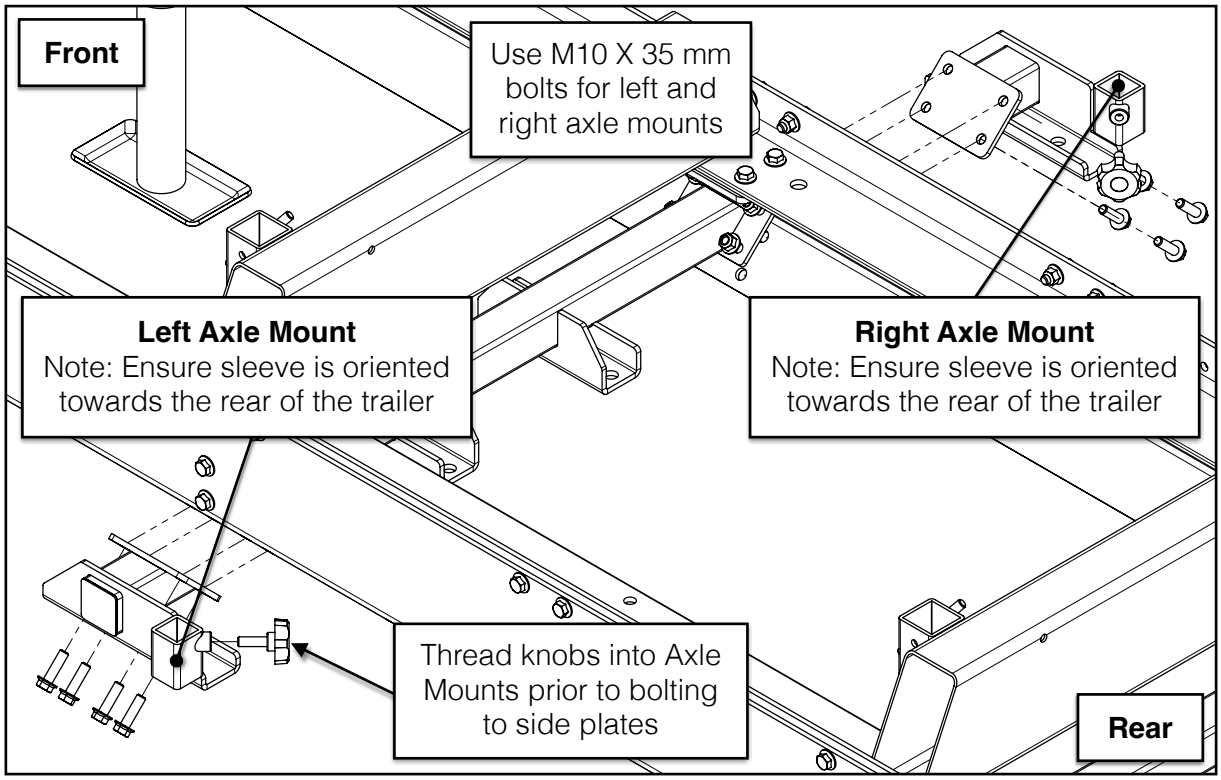
Front
Use M10 X 35 mm bolts for left and right axle mounts
Left Axle Mount
Note: Ensure sleeve is oriented towards the rear of the trailer
Right Axle Mount
Note: Ensure sleeve is oriented towards the rear of the trailer
Thread knobs into Axle Mounts prior to bolting to side plates
Rear

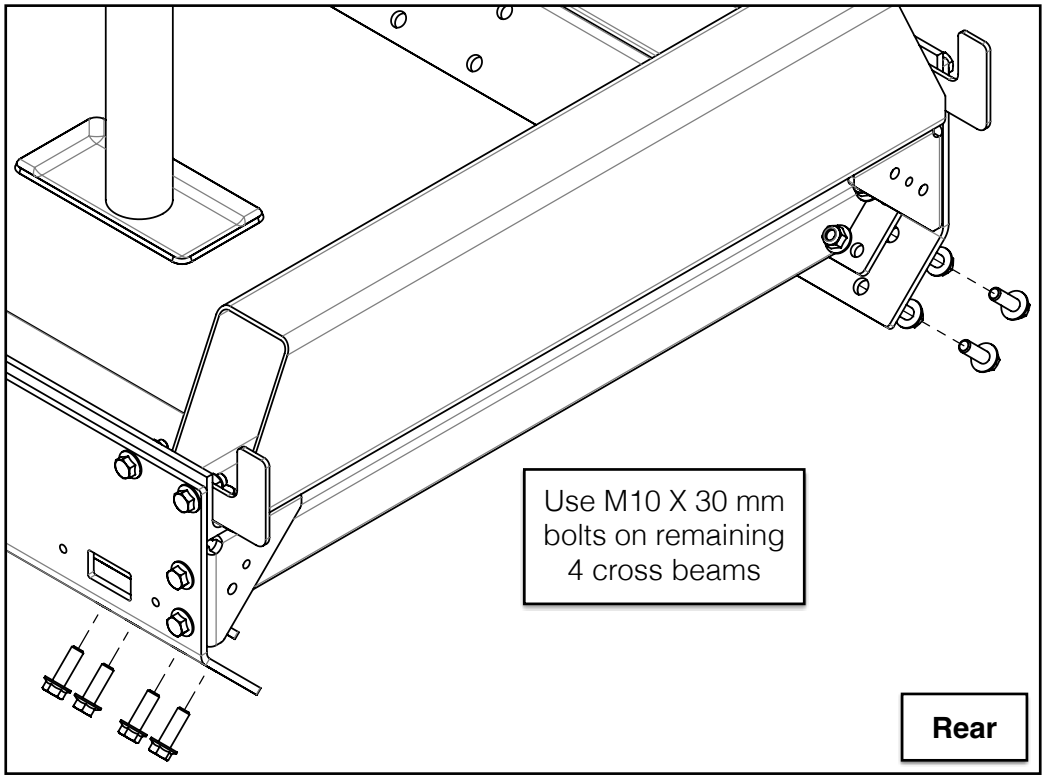
Use M10 X 30 mm bolts on remaining 4 cross beams
Rear

12. AXLES

Using the hardware listed below, install the axles as shown on the next page. Tighten these bolts to the ***specified torque***. Place a bubble level across both axles and check for level. If the level is off, use axle shim plates between the inner axle mounting face and axle cross beam to ensure the axles ride level. The shims are not necessary if the axles sit level after assembly.

8x	M12 X 35 mm Flanged Hex Bolt	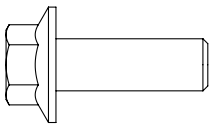	1x	Axle [Left]	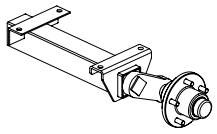
8x	M12 Flanged Lock Nut	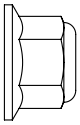	1x	Axle [Right]	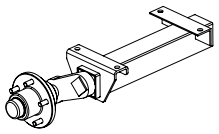
			6x	Axle Shim Plate	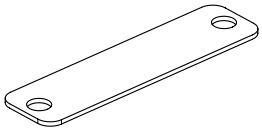

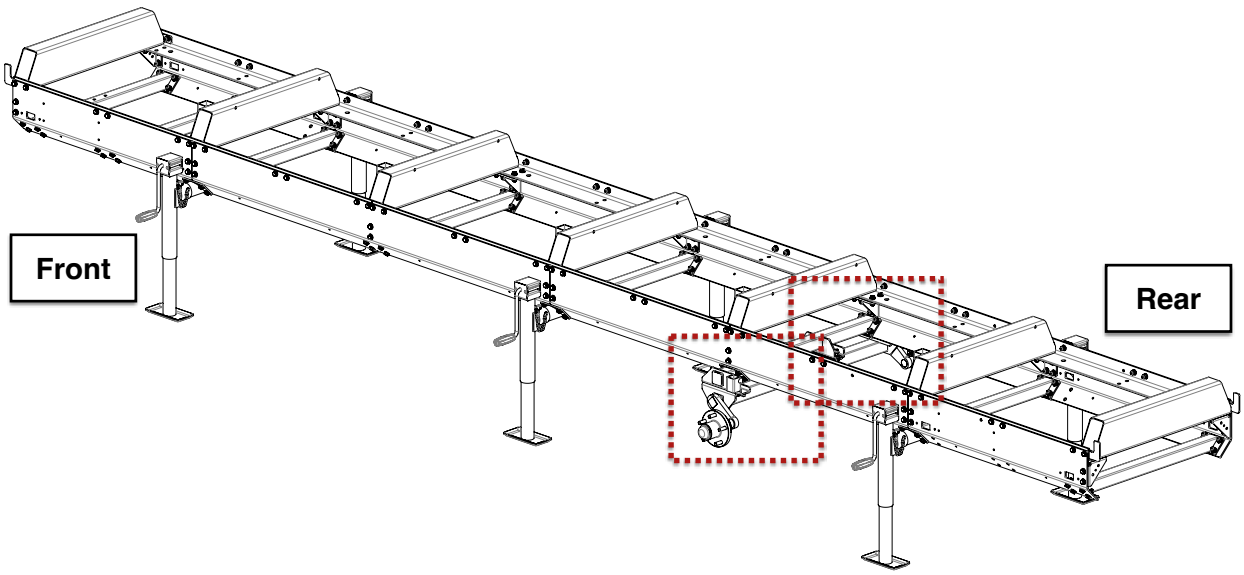

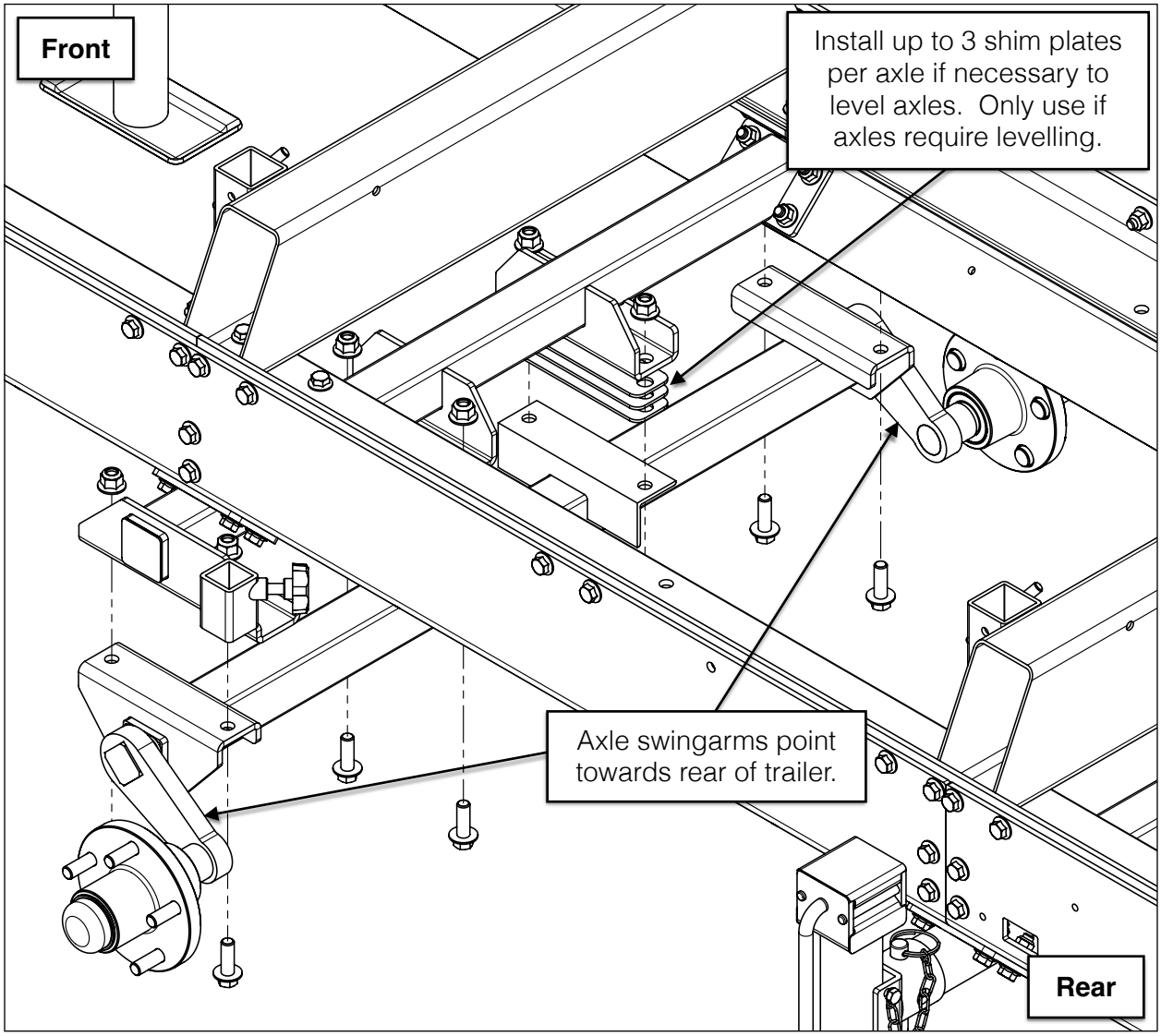
Front
Install up to 3 shim plates per axle if necessary to level axles. Only use if axles require levelling.
Axle swingarms point towards rear of trailer.
Rear

13. WHEELS

Using the hardware listed below, install the wheels on the axles. Using a torque wrench, torque the lug nuts to 80 ft•lb / 110 N•m following the pattern shown below.

10x	1/2-20 Lug Nut	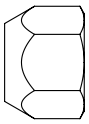	2x	5.30-12 Wheel	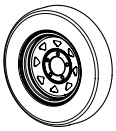

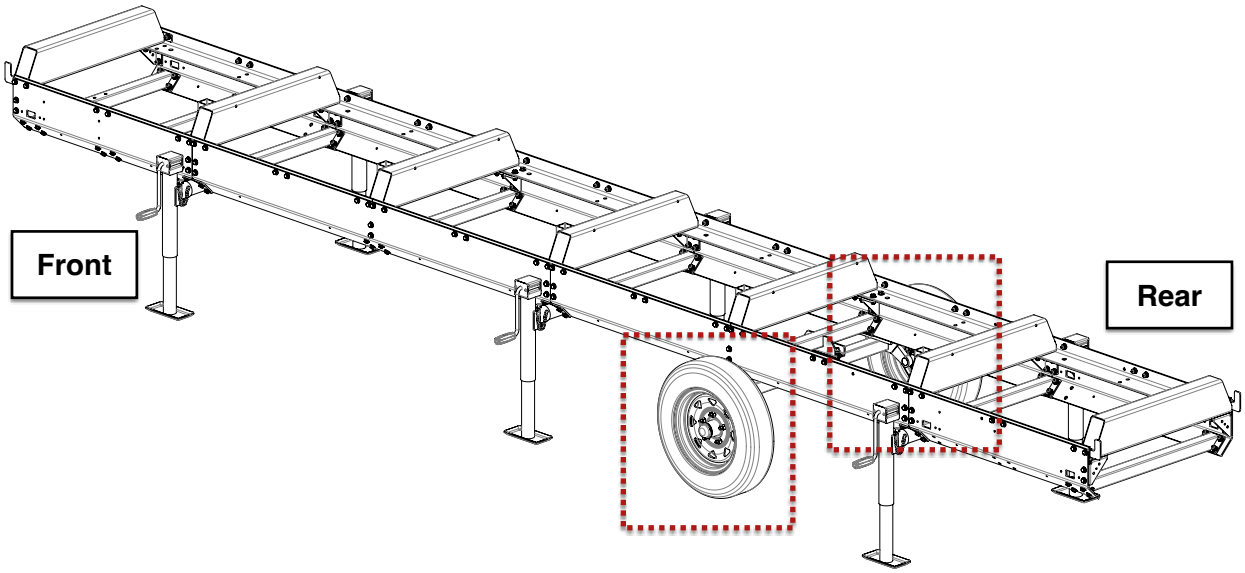

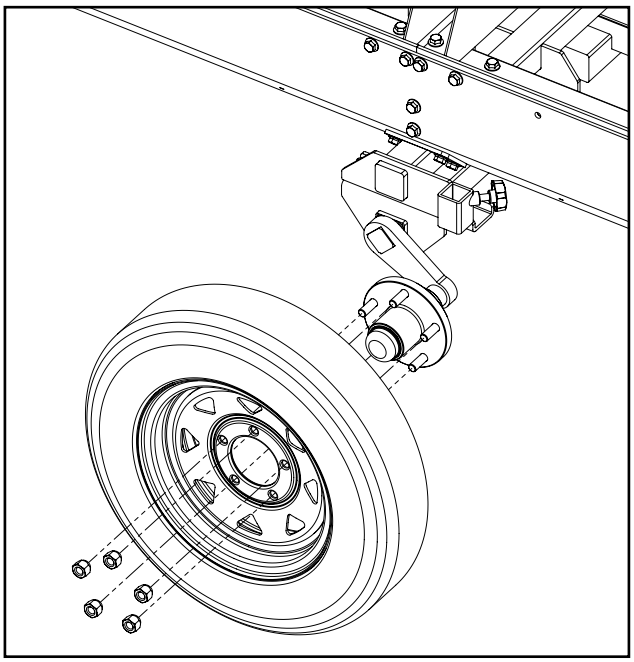

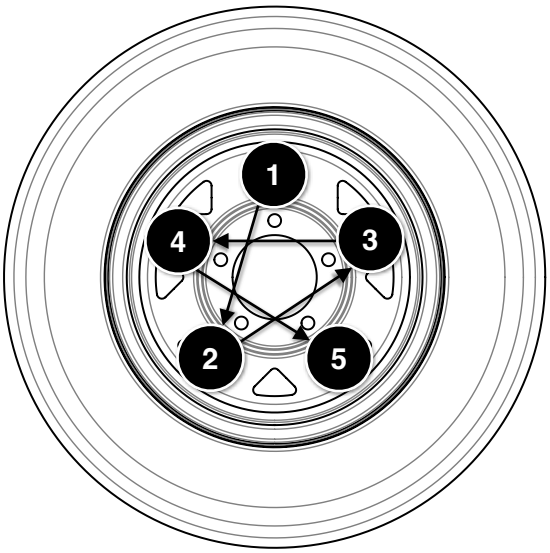

14. FENDERS

Using the hardware listed below, assemble the fenders to the fender brackets. Tighten these bolts. Slide the post on the fender bracket into the sleeve on the axle mount and insert the locking pin through the hole located at the bottom of the fender bracket post. Secure the fender/ fender bracket sub-assembly using the M10 X 30 mm knob by threading it into the axle mount until tight.

8x	M8 X 20 mm Flanged Hex Bolt	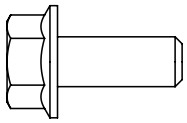	2x	Fender Bracket	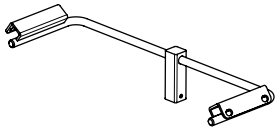
8x	M8 Flanged Lock Nut	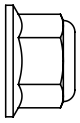	2x	Fender	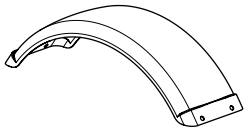
			2x	Locking Pin	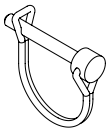

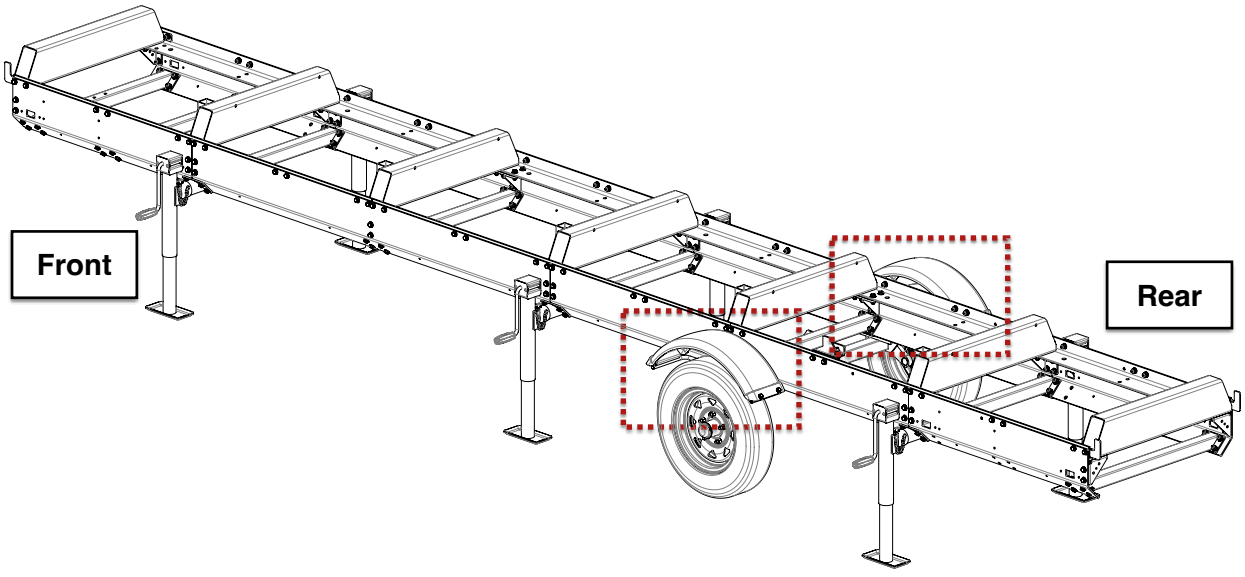

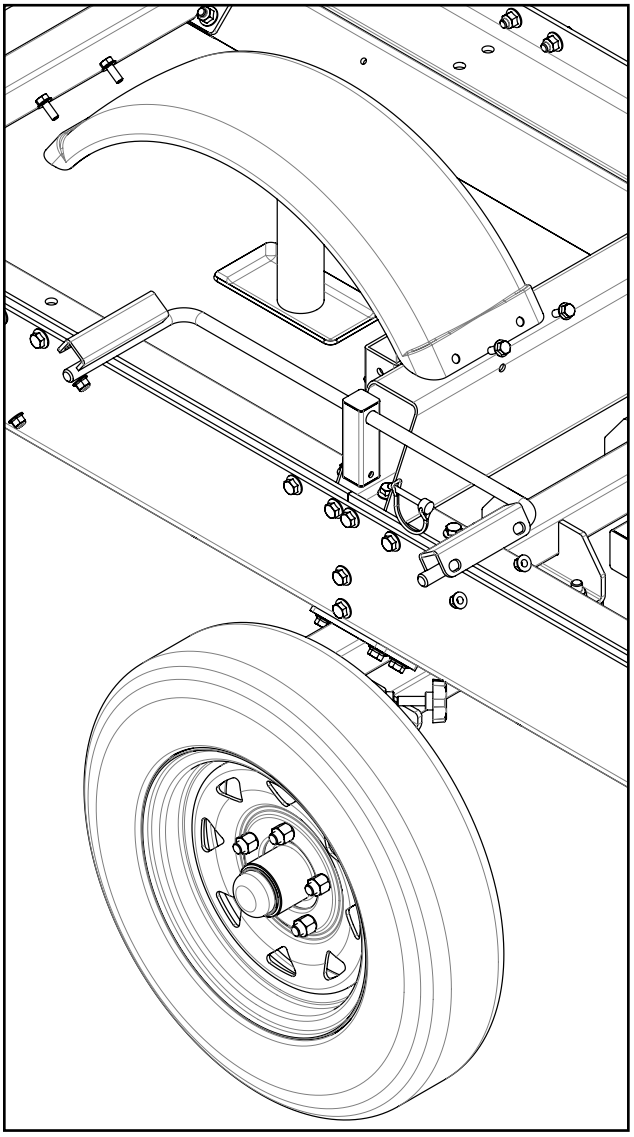

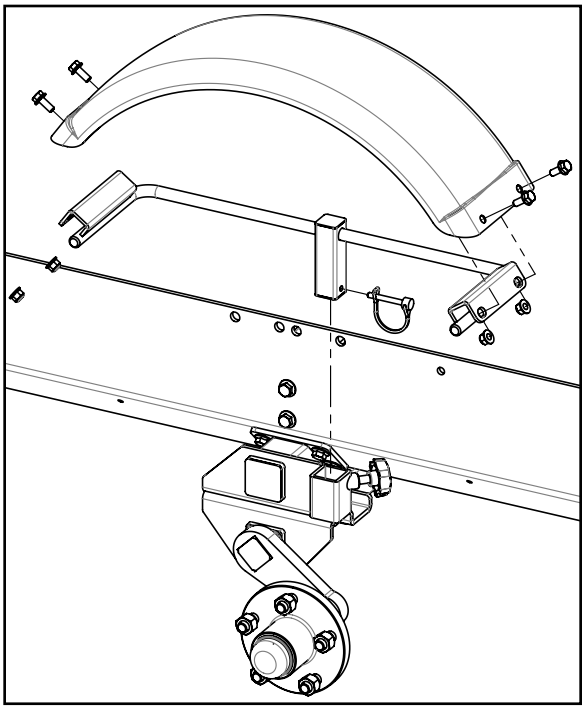

Some components removed for clarity

15. TONGUE, HITCH COUPLER

Using the hardware listed below, install the trailer tongue and hitch coupler. Don't tighten the M10 X 160 mm bolts in this step since the plug for the lights will be routed through the tongue in the following step. Tighten the coupler bolts.

2x	M12 X 100 mm Hex Bolt **(Europe Only)**	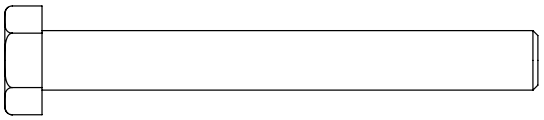
2x	M12 X 70 mm Hex Bolt **(North America)**	
2x	M12 Lock Nut	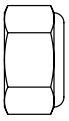
4x	M10 X 160 mm Hex Bolt	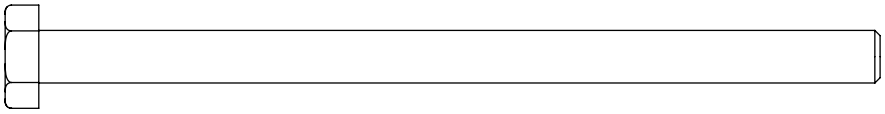
4x	M10 Flat Washer	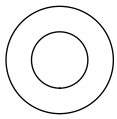
4x	M10 Lock Nut	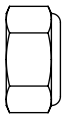
1x	Tongue	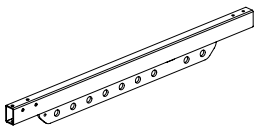
1x	Hitch Coupler	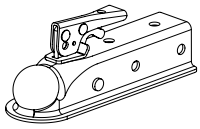
2x	Tongue Bracket	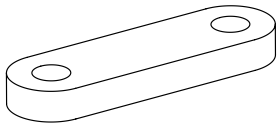
1x	Locking Pin	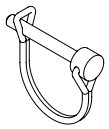

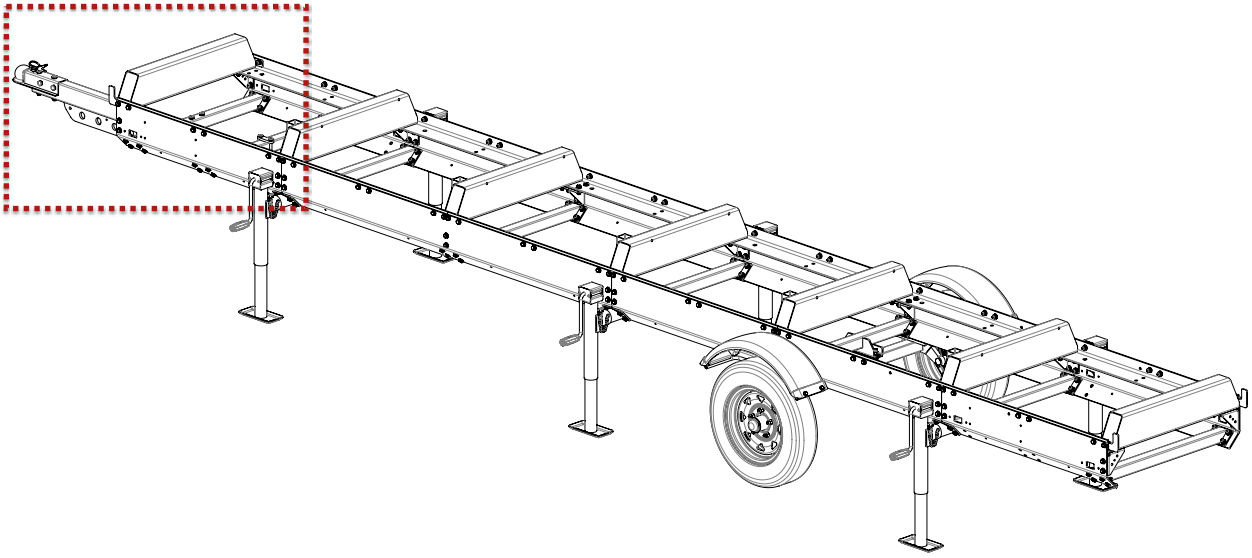

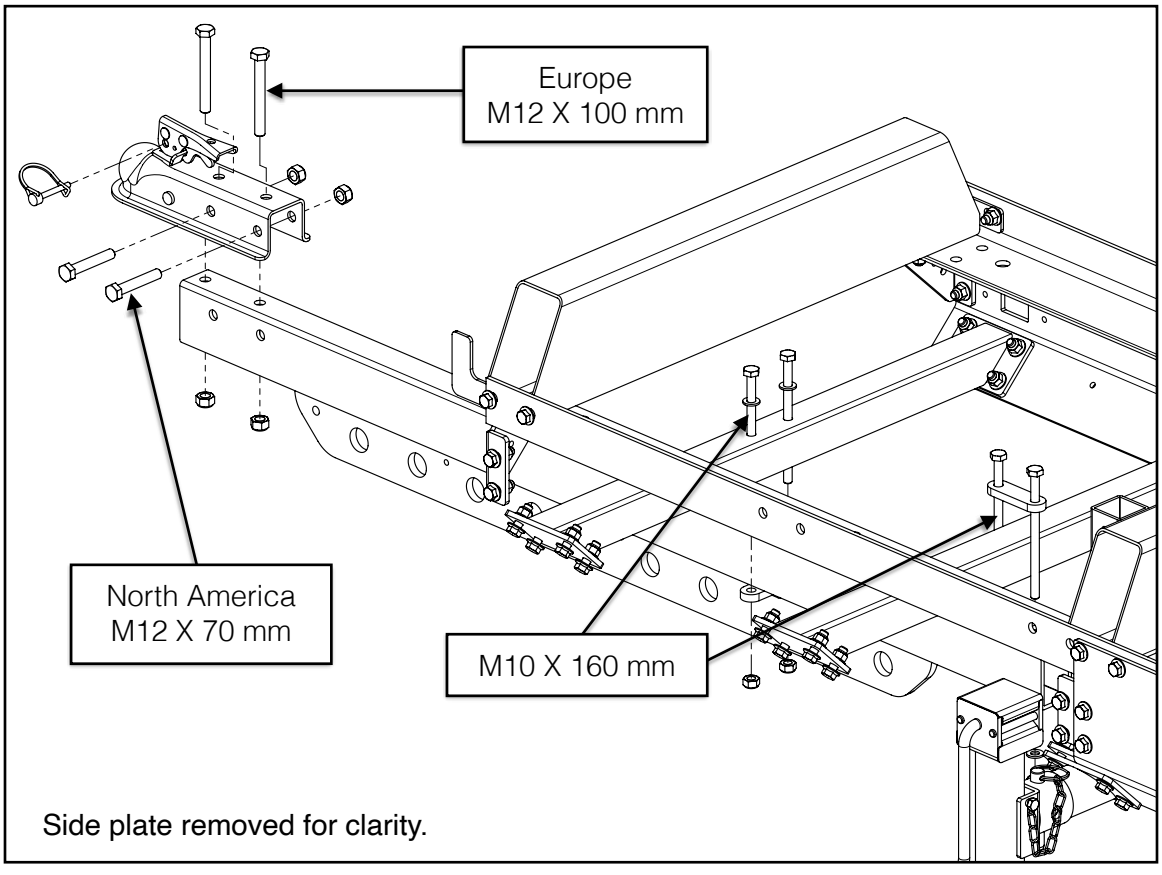
Europe
M12 X 100 mm
North America
M12 X 70 mm
M10 X 160 mm
Side plate removed for clarity.

16. LIGHTING

Using the hardware listed below, install the taillight bracket and country appropriate wire harness. Secure tail lights to the taillight bracket using M5 flanged lock nuts before mounting the taillight bracket to trailer. Use cable clamps to secure wire harness to side plates down right-side of trailer. Tighten all bolts. The M10 X 160 mm tongue bolts from the previous step can now be tightened after wiring has been routed through the tongue.

On the European (**EU**) version, install the 4 side reflectors, 2 front reflectors, and 2 rear reflector brackets and reflectors as shown on the following pages. There are no red/amber side lights on the European wire harness like the ones included with the North American (**NA**) version.

4x	M8 X 25 mm Flanged Hex Bolt	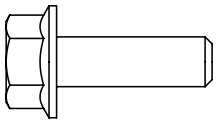	1x	Taillight Bracket	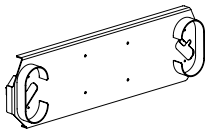
4x	M8 Flanged Lock Nut	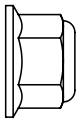	2x	Rear Reflector Bracket **(EU Only)**	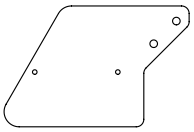
12x	M6 X 20 mm Hex Bolt	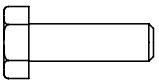	2x	Rear Reflector **(EU Only)**	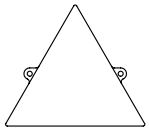
12x	M6 Flat Washer		4x	Side Reflector **(EU Only)**	
12x	M6 Lock Nut		2x	Front Reflector **(EU Only)**	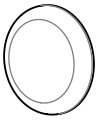
12x	M5 X 20 mm Pan Head Screw **(8x NA Only)**	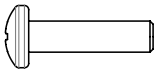	12x	Cable Clamp	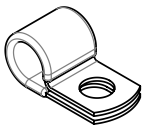
14x	M5 Flanged Lock Nut **(8x NA Only)**		1x	Wire Harness **(NA Only)**	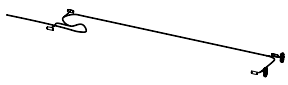
			1x	Wire Harness **(EU Only)**	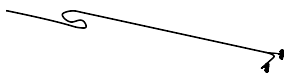

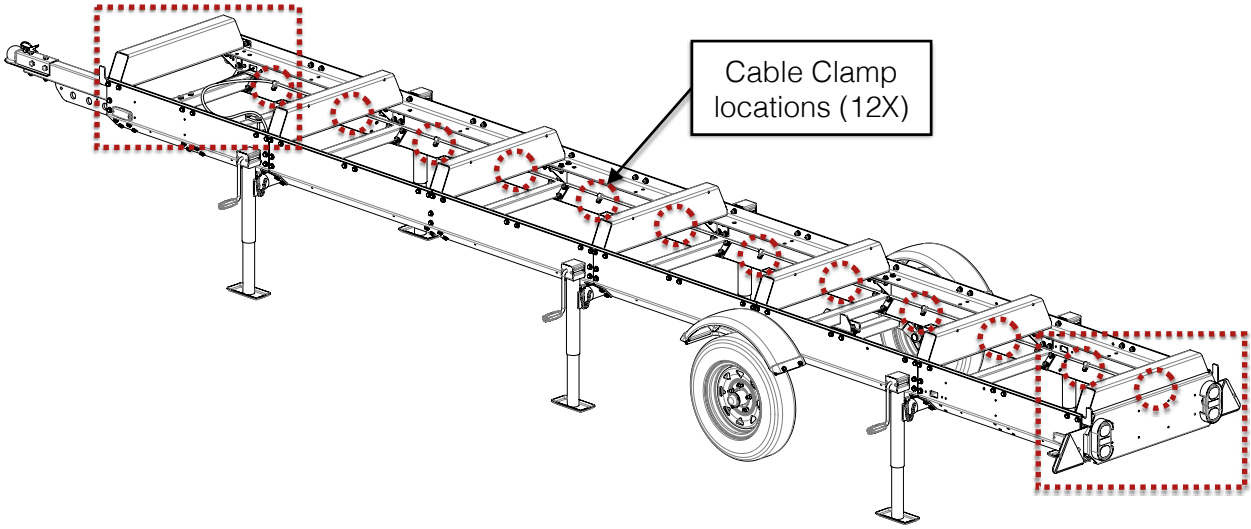

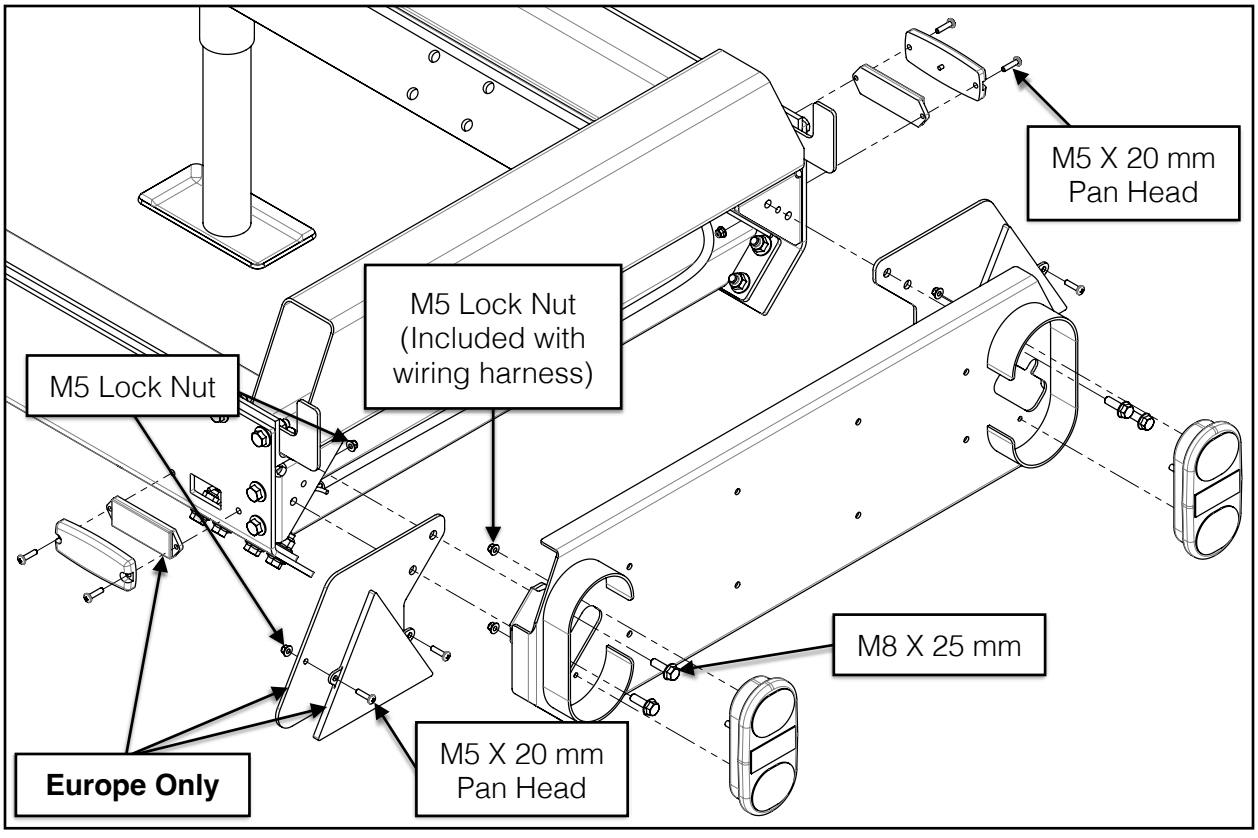

Note: tail lights (North America and Europe) and side lights (North America only) are integral to the wire harness. They are shown exploded for assembly clarity.

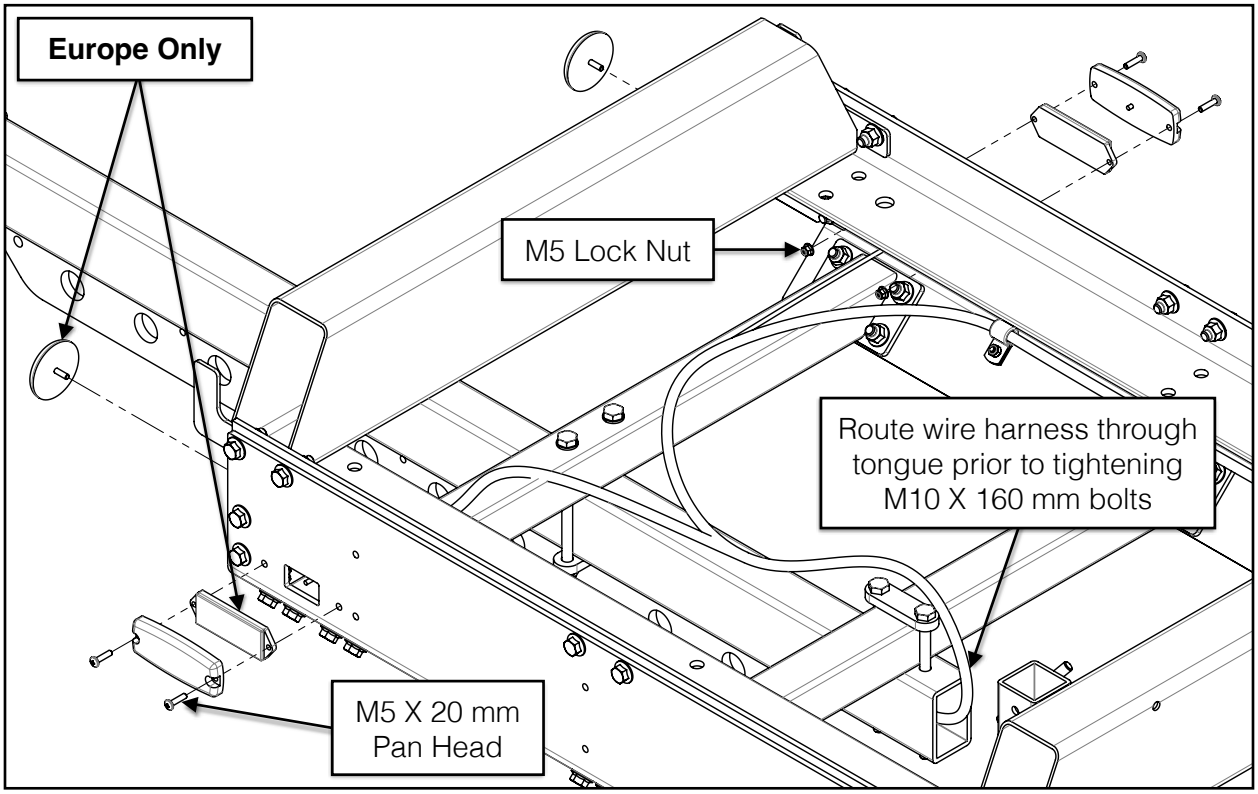

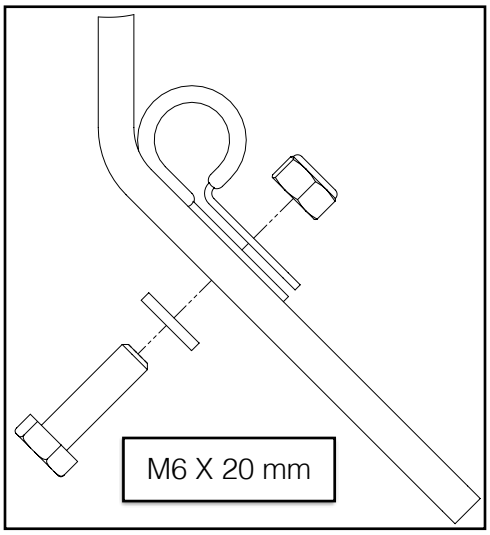

There are 2 cable clamps per short side plate (2) and 4 per long side plate (2) for a total of 12. Cable clamps are installed down the right-hand side of the trailer only. Use the M6 X 20 mm hex bolts, M6 washers, and M6 lock nuts as shown. This applies to both North American and European models.

17. NAMEPLATE

Using the hardware listed below, install the two (2) *Woodlander* nameplates as shown.

8x	M6 X 20 mm Hex Bolt	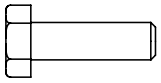	2x	Woodlander Nameplate	
8x	M6 Flat Washer				
8x	M6 Lock Nut				

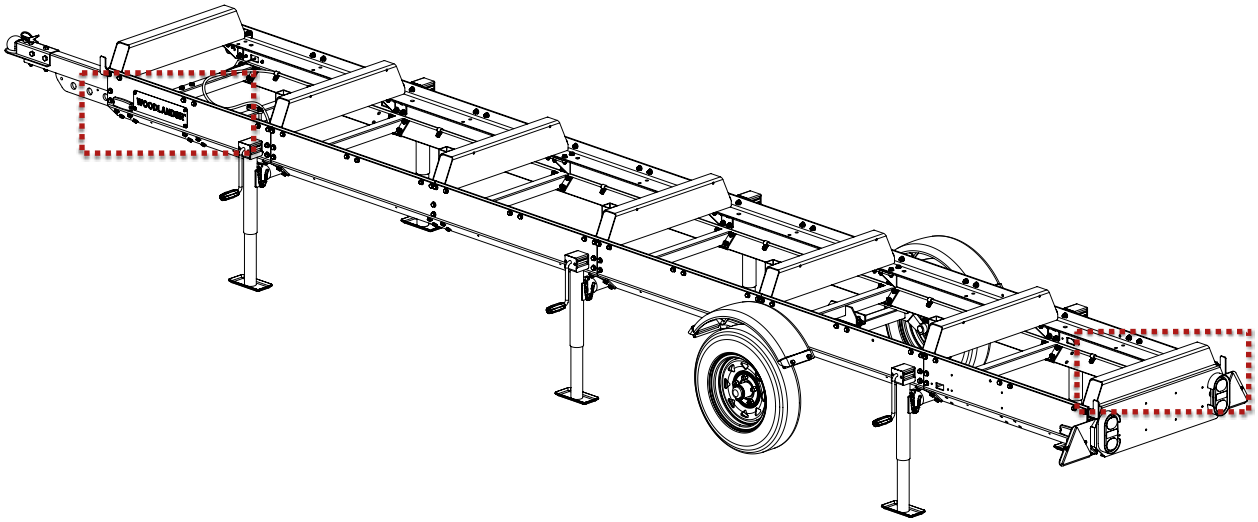

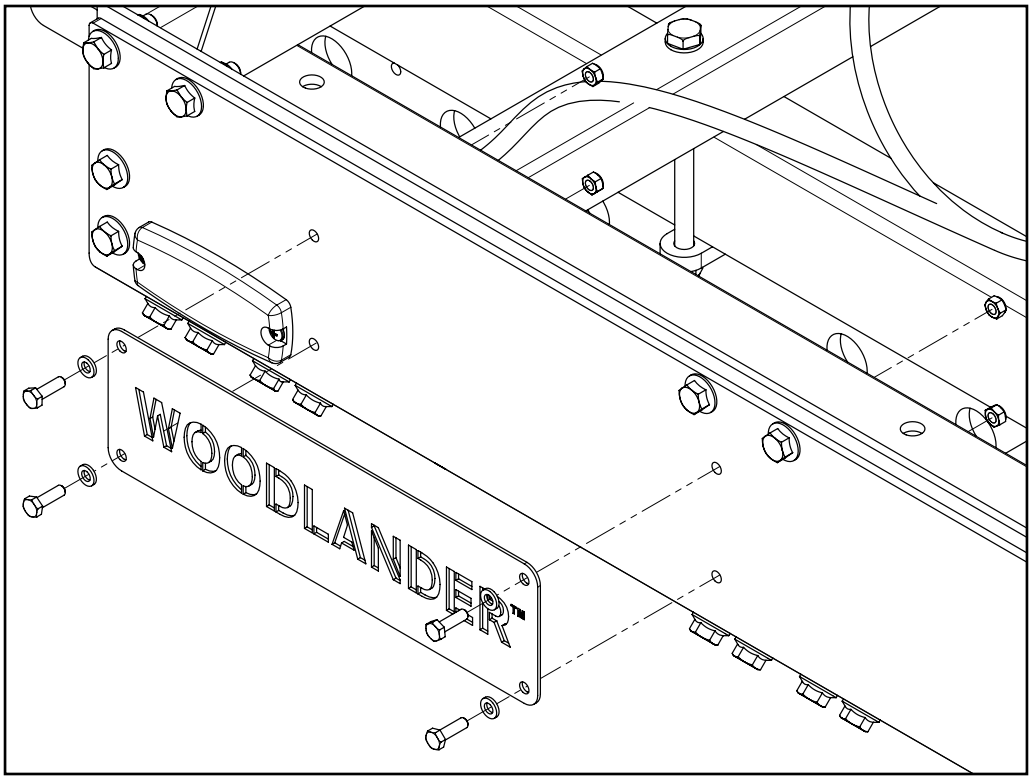
WOODLANDER

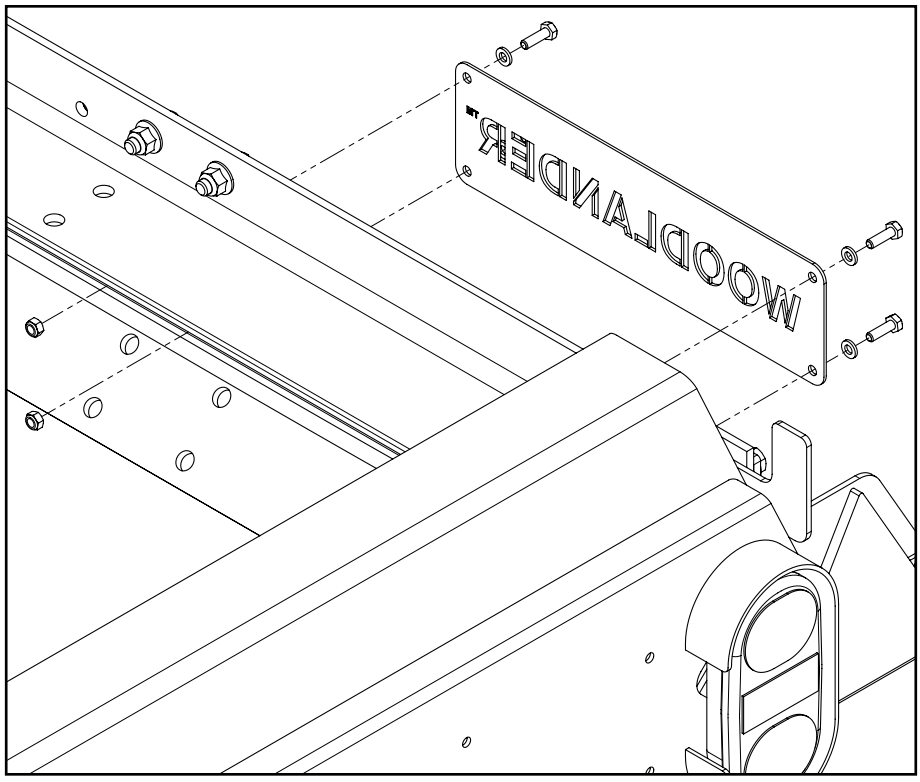
WOODLANDER

18. SAFETY CHAIN

Using the hardware below, install the safety chain on the trailer tongue.

1x	M10 X 40 mm Hex Bolt	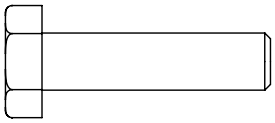	1x	Safety Chain	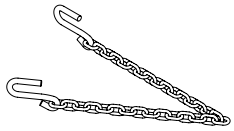
2x	M10 Flat Washer	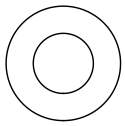			
1x	M10 Lock Nut	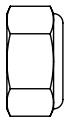			

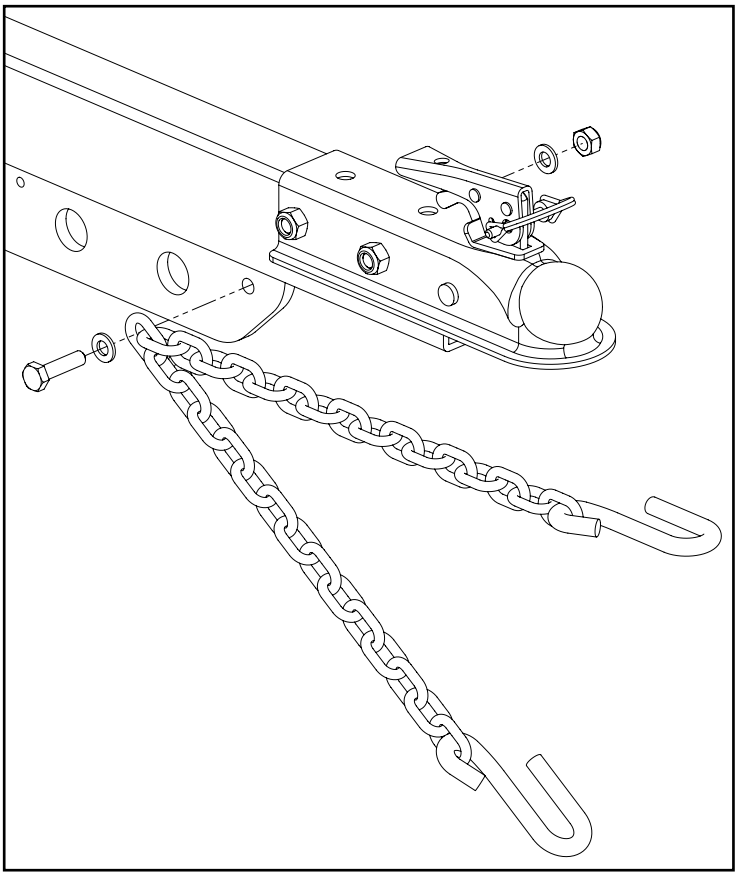

19. HEAD LOCK-DOWN PLATES

Place the assembled sawhead on the trailer. Using the hardware listed below, install the head lock down plates as shown on the next page. Tighten these bolts to the ***specified torque***.

4x	M6 X 40 mm Hex Bolt	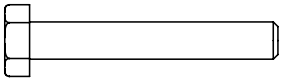
4x	M6 X 25 mm Hex Bolt	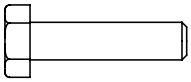
16x	M6 Flat Washer	
8x	M6 Lock Nut	
4x	Lock-Down Pin	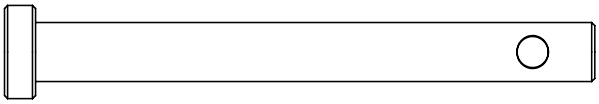
4x	Linch Pin	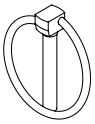
4x	Head Lock-Down Bracket	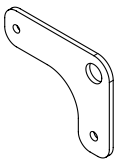
1x	10 mm Drill Bit	

Remove the eight (8) spacers from the carriage wheel axles and discard the four (4) short spacers. Only the four (4) tall spacers will be reused in the next steps.

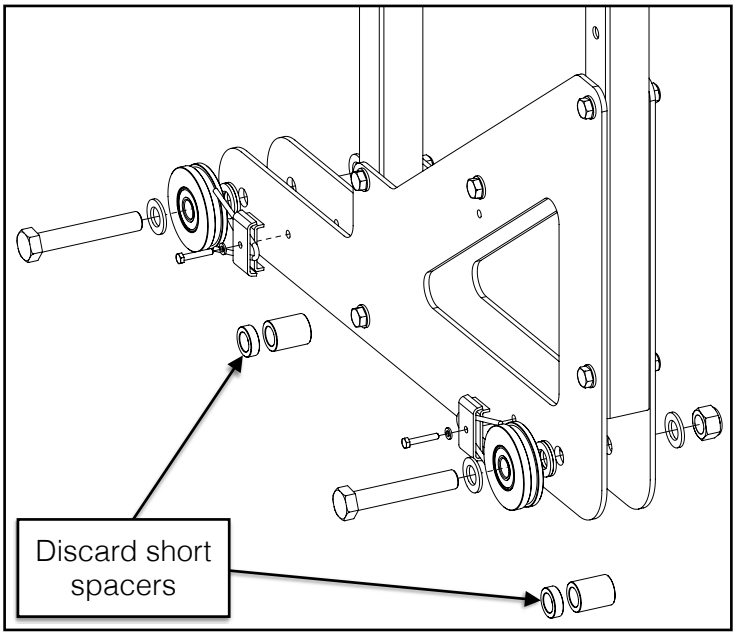

Using the provided M6 X 40 mm and M6 X 25 mm bolts, install the lock-down plates in place of the short spacers with the taller spacer sandwiched between. Reuse the four (4) M6 flat washers from the wheel sweepers on the sawmill when replacing the bolts.

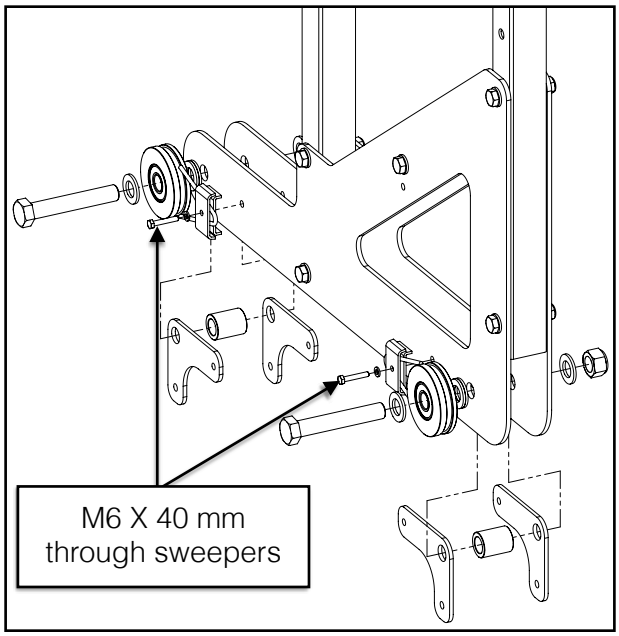

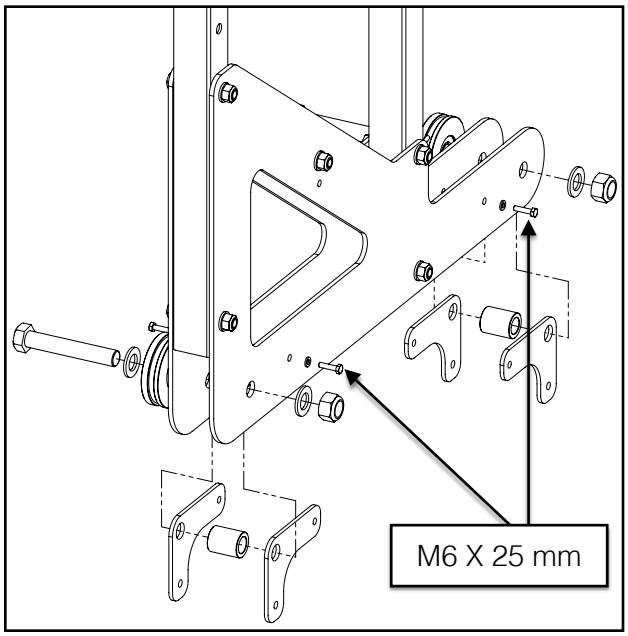

SAWHEAD CARRIAGE LOCK-DOWN POSITIONS

When deciding where to position the sawhead carriage, it is important to consider the tongue weight capacity of the tow vehicle. Lighter tongue weights are better suited for ATVs and smaller vehicles while heavier tongue weights work well with larger vehicles like pickup trucks.

****Note: Tolerance on tongue weights is approx. ±15 lb [±7 kg] depending on the model trailer (Woodlander™ XL or Woodlander™ MAX XL) and how many accessories are installed (Lap Siding, Power Head, Log Loading Ramp Kit, Toolbox, Cant Hook, etc.)****

Tongue Weight "TW" (lb) vs. Carriage Position Dim "X" (in)										
TW	115 lb	150 lb	185 lb	220 lb	245 lb*	260 lb	295 lb	330 lb	365 lb	400 lb
Dim X	18 in	28 in	38 in	48 in	53-⅞ in*	58 in	68 in	78 in	88 in	98 in

Tongue Weight "TW" (kg) vs. Carriage Position Dim "X" (cm)										
TW	52 kg	68 kg	84 kg	100 kg	111 kg*	118 kg	134 kg	150 kg	166 kg	182 kg
Dim X	46 cm	71 cm	97 cm	122 cm	137 cm*	147 cm	173 cm	198 cm	224 cm	249 cm

*Sawhead carriage centre of mass positioned over axles (highlighted yellow)

Example #1: X = 18 in [46 cm]
TW = 115 lb [52 kg]

ATVs and smaller vehicles

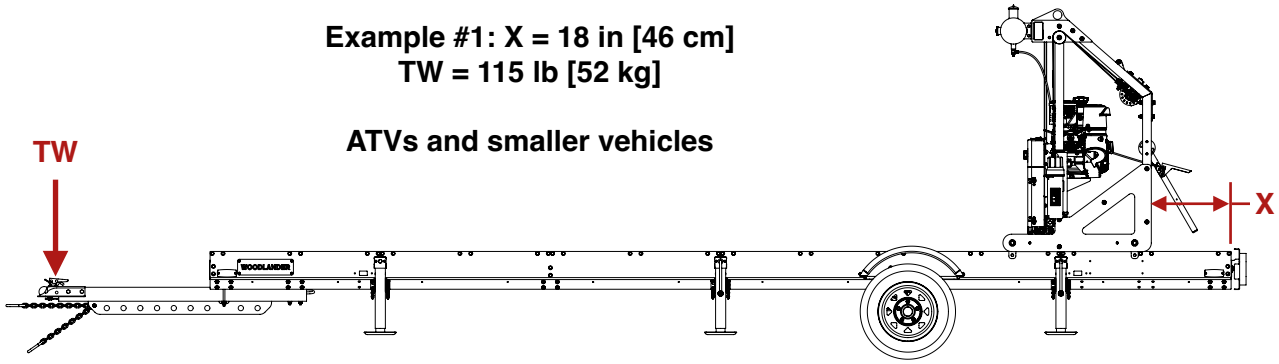

Example #2: X = 53-⅞ in [137 cm]
TW = 245 lb [111 kg]
(Centre of mass over axle)

Pickups and larger vehicles

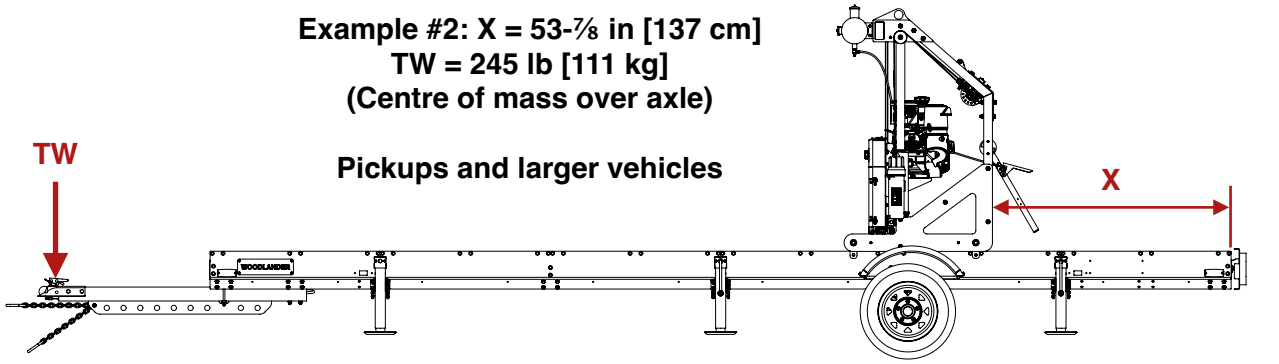

DRILLING THE LOCK-DOWN HOLES

Drill four (4) holes for the lock-down plates using the provided 10 mm drill bit. Measure the distance (**Dim X**) from the rear edge of the track rail (*not* the carriage stop) to the rear post of the sawhead. Insert a locking pin into each hole as they are drilled. Secure each locking pin with a linch pin.

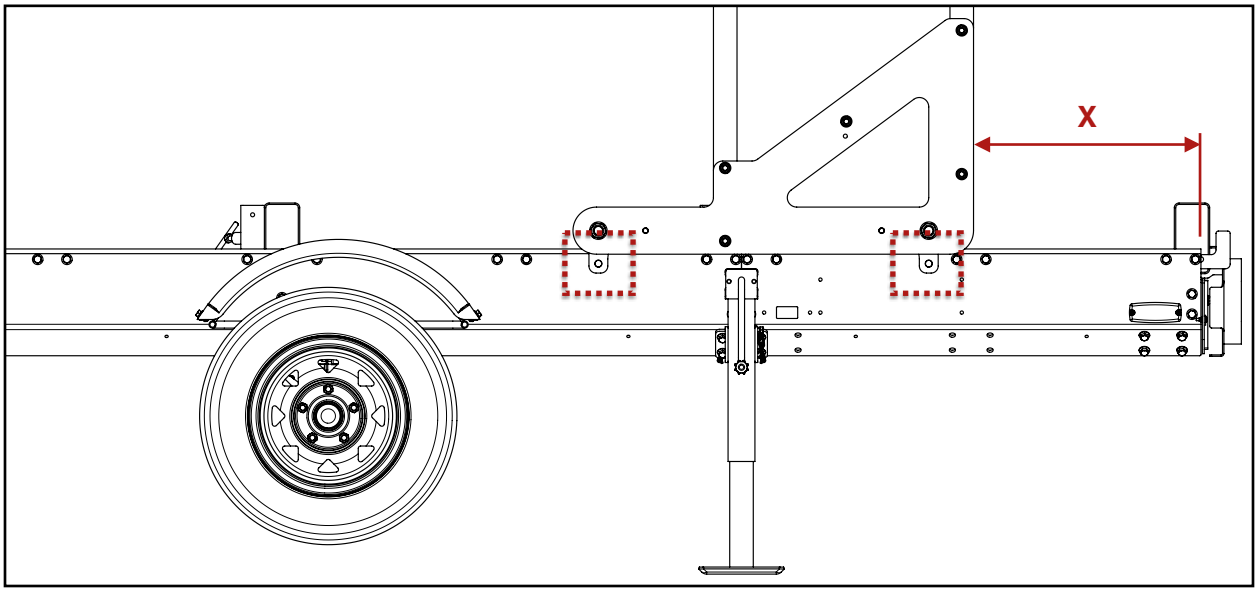

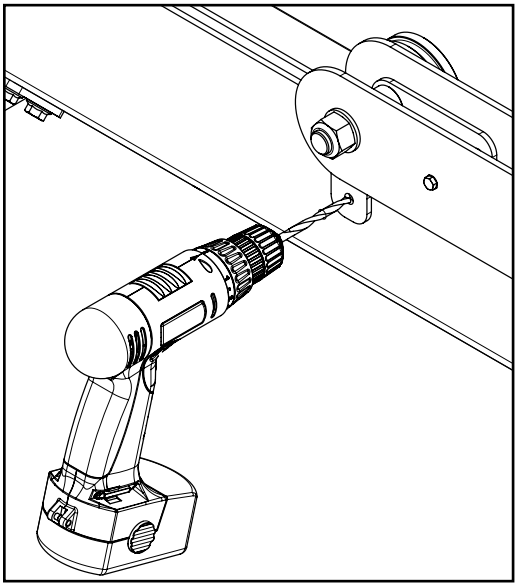

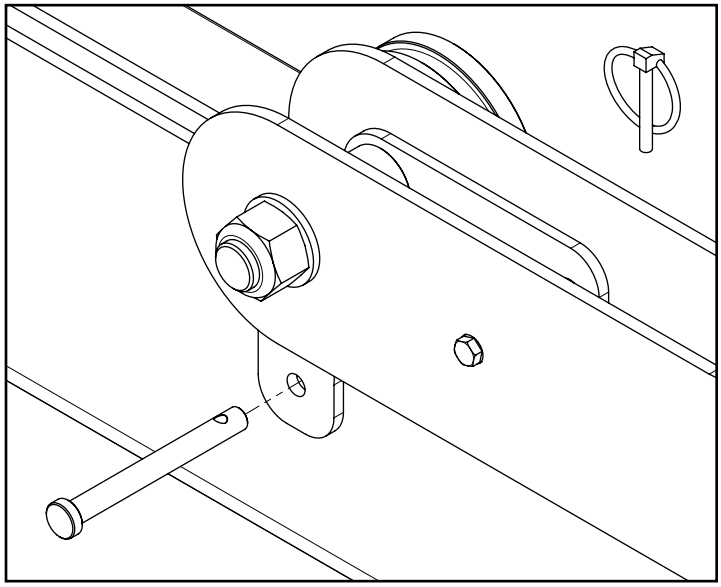

WARNING!

Use cutting oil when drilling holes for lock-down brackets or else the heat generated could ruin the drill bit and produce a rough surface finish.

OPERATION
LOCKING-DOWN THE SAWMILL HEAD

When transporting the trailer, it is imperative that the sawmill head is locked-down securely to the trailer. Start by inserting the four (4) locking pins through the lock-down brackets and secure them with linch pins.

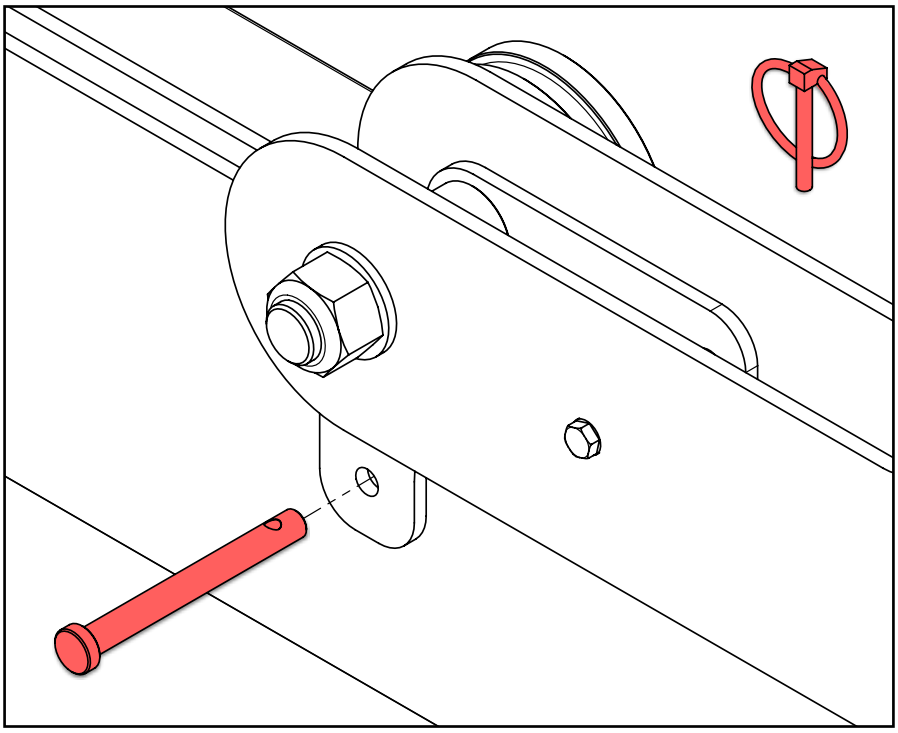

Next, route the included ratchet strap (shown below) around the sawmill and trailer to fully lock-down the sawmill head as shown on the next page.

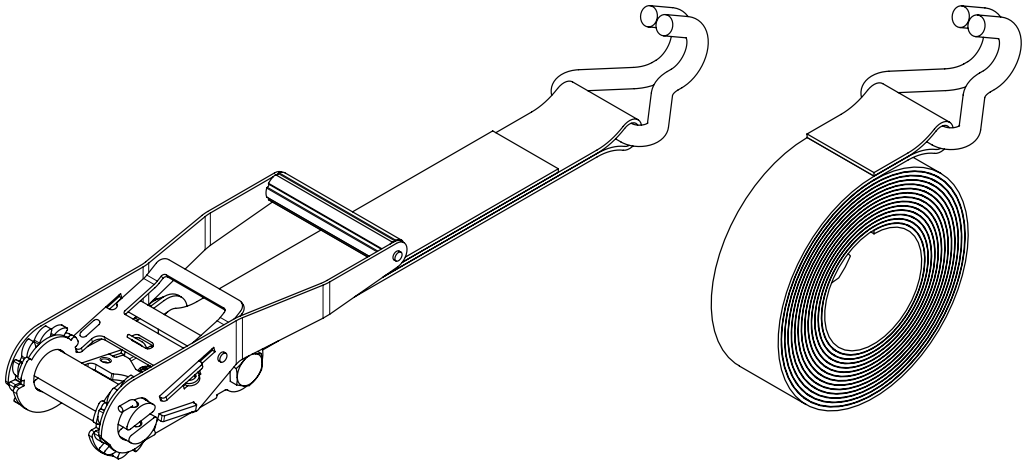

Lower the sawhead to its lowest position. Then insert the short strap hook into the cross beam lifting eye on one side of the sawmill, route the long strap down and under the bottom of the trailer, then up to the opposite lifting eye. Ratchet the strap tight until there is no slack.

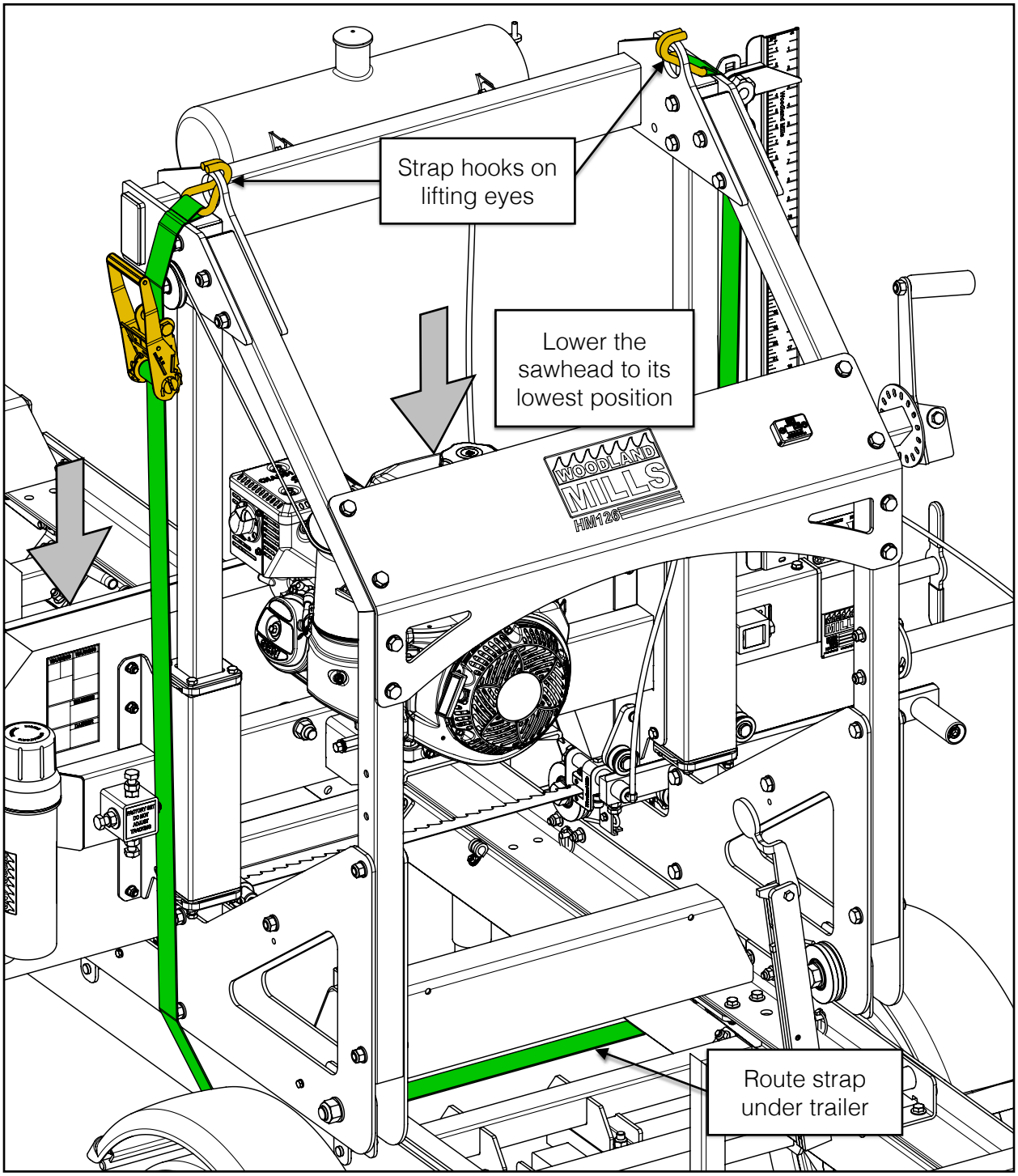

REPLACEMENT PARTS ORDERING

When ordering replacement parts, first locate the balloon number(s) from the appropriate ***exploded assembly view*** as shown in the example below:

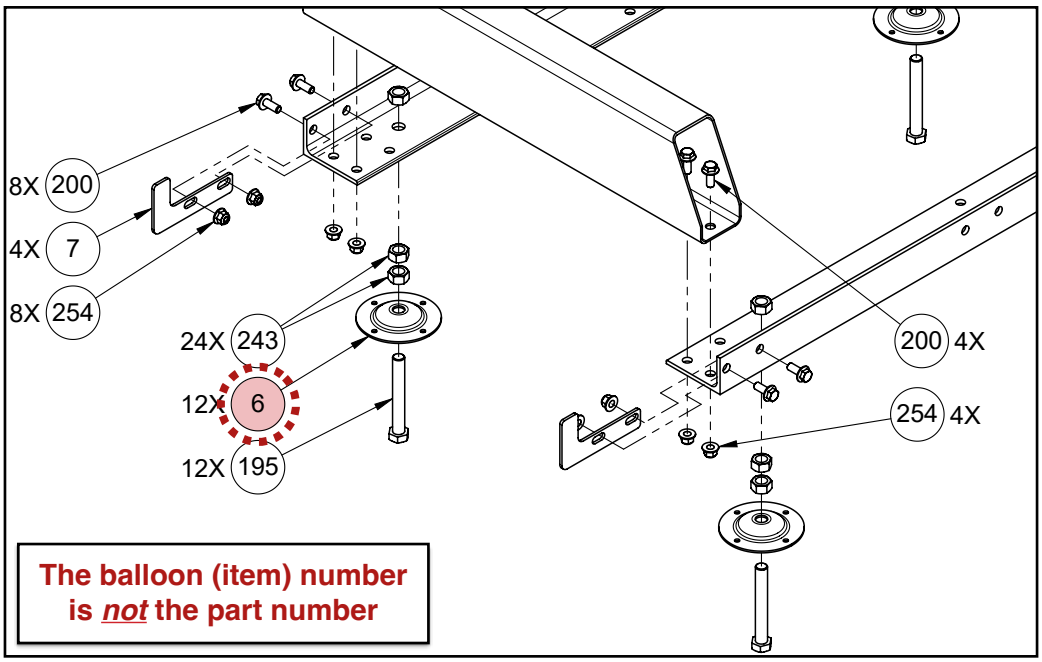

Next, turn to the ***Parts Lists*** section and locate the balloon number in the "**Item**" column:

PARTS LIST

Item	Quantity		Part No.	Description
	14 hp	9.5 hp		
1	4	4	0001073	TRACK RAIL, 58.5 mm TALL
2	2	2	0001075	LOG BUNK, END
3	2	2	0001080	LOG BUNK, MID
4	1	1	0001084	LOG BUNK, CENTER
5	2	2	0001072	REINFORCEMENT PLATE, 90 X 200 mm
6	12	12	0001071	LEVELLING FOOT BASE
7	4	4	0001055	CARRIAGE STOP
8	1	1	0001062	LOG CLAMP SHAFT AND BRACKET WELDMENT

Record the part number (e.g. *0001071, HHB-MBM080FCJ, etc.*) in the "**Part No.**" column.

Contact Woodland Mills through the website or via phone/email. If possible, include the invoice or sales number from the purchased product so an associated account can be located. If the account has multiple addresses on file, please indicate to which address the replacement part(s) will be shipped.

EXPLODED ASSEMBLY VIEWS
CHASSIS AND TRACK

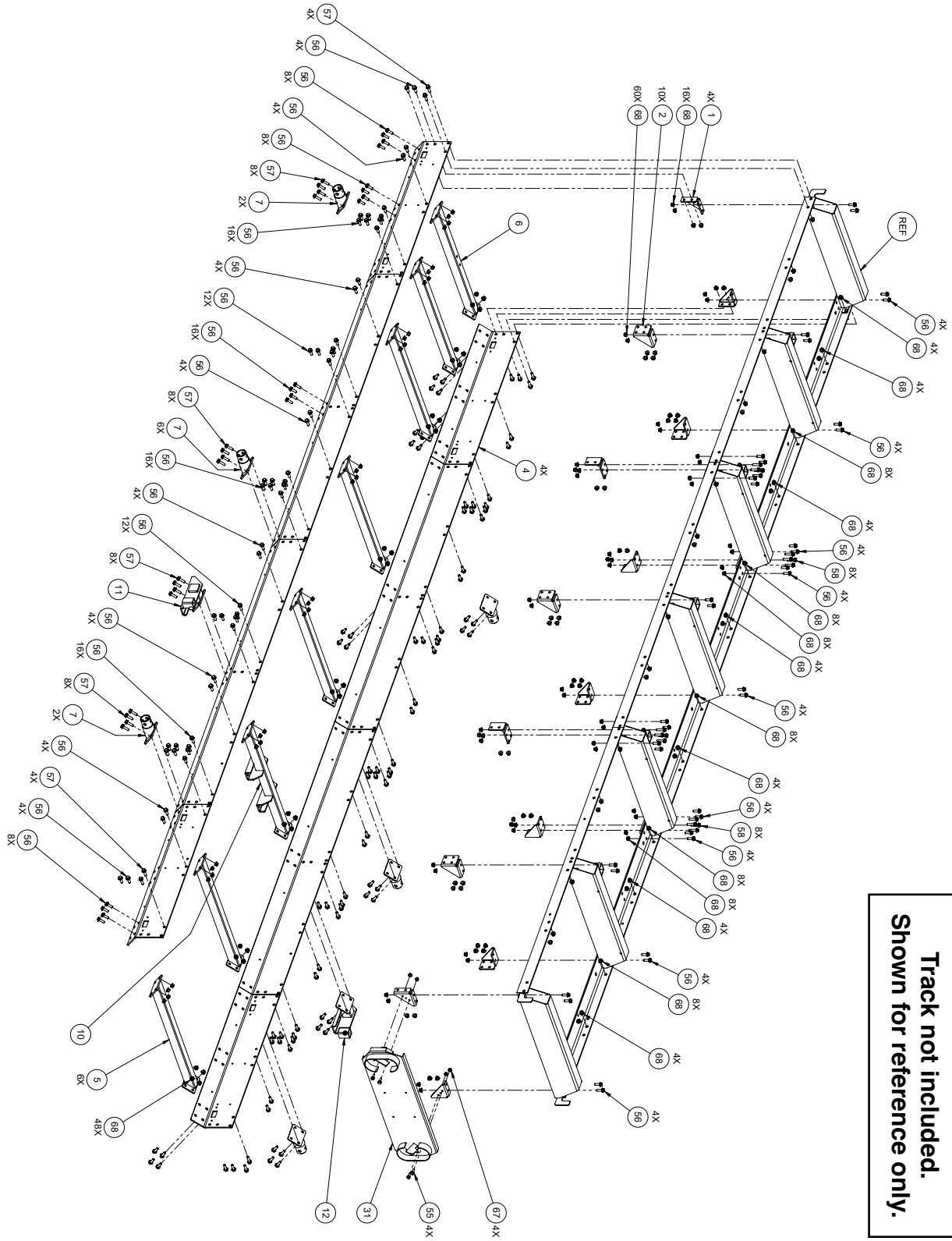

Track not included.
Shown for reference only.

TONGUE

NORTH AMERICA

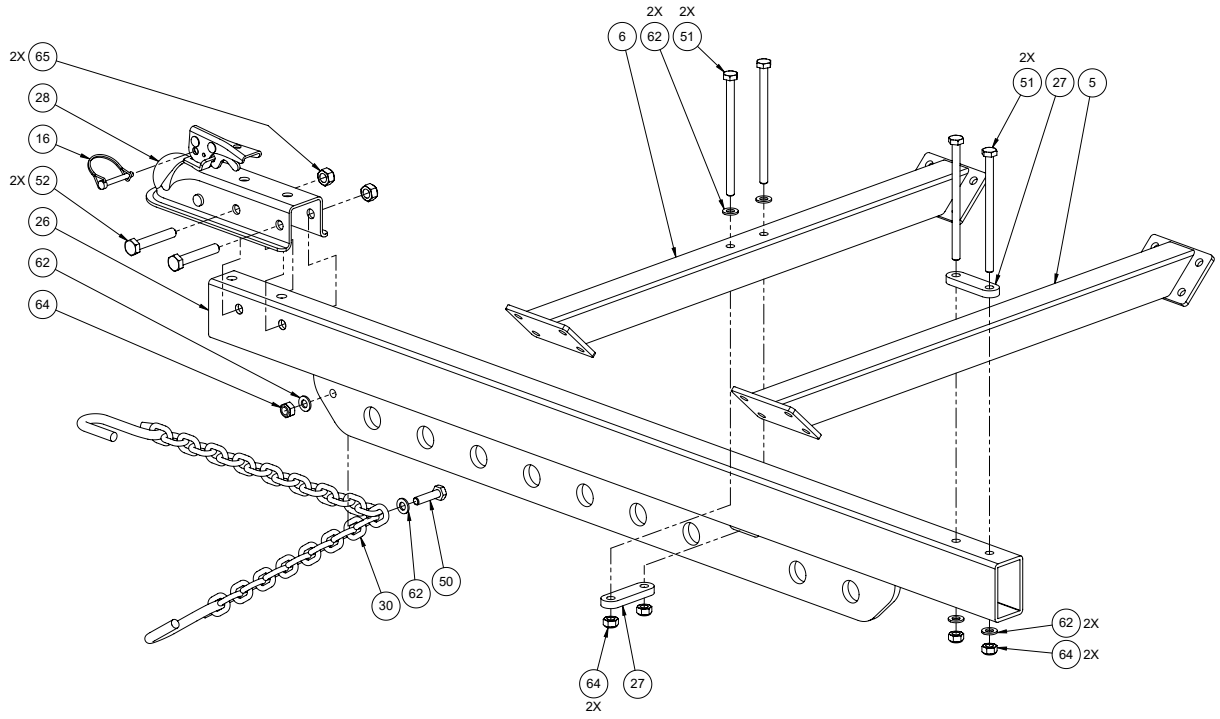

EUROPE

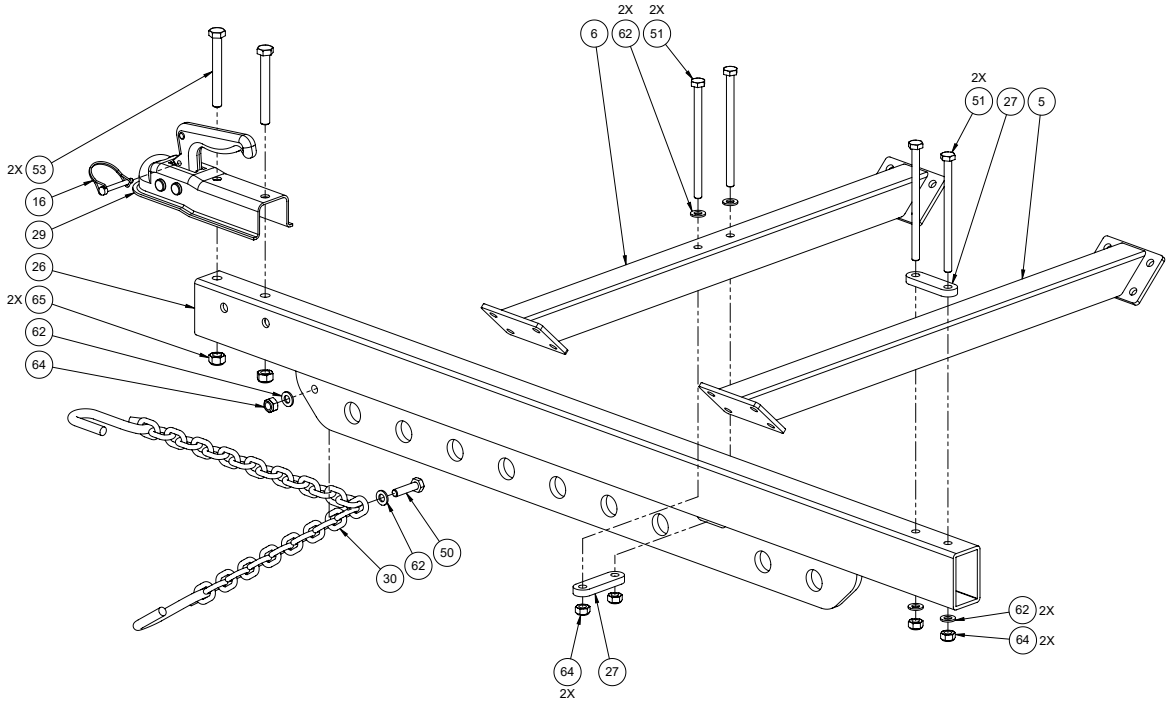

AXLES, WHEELS, AND FENDERS

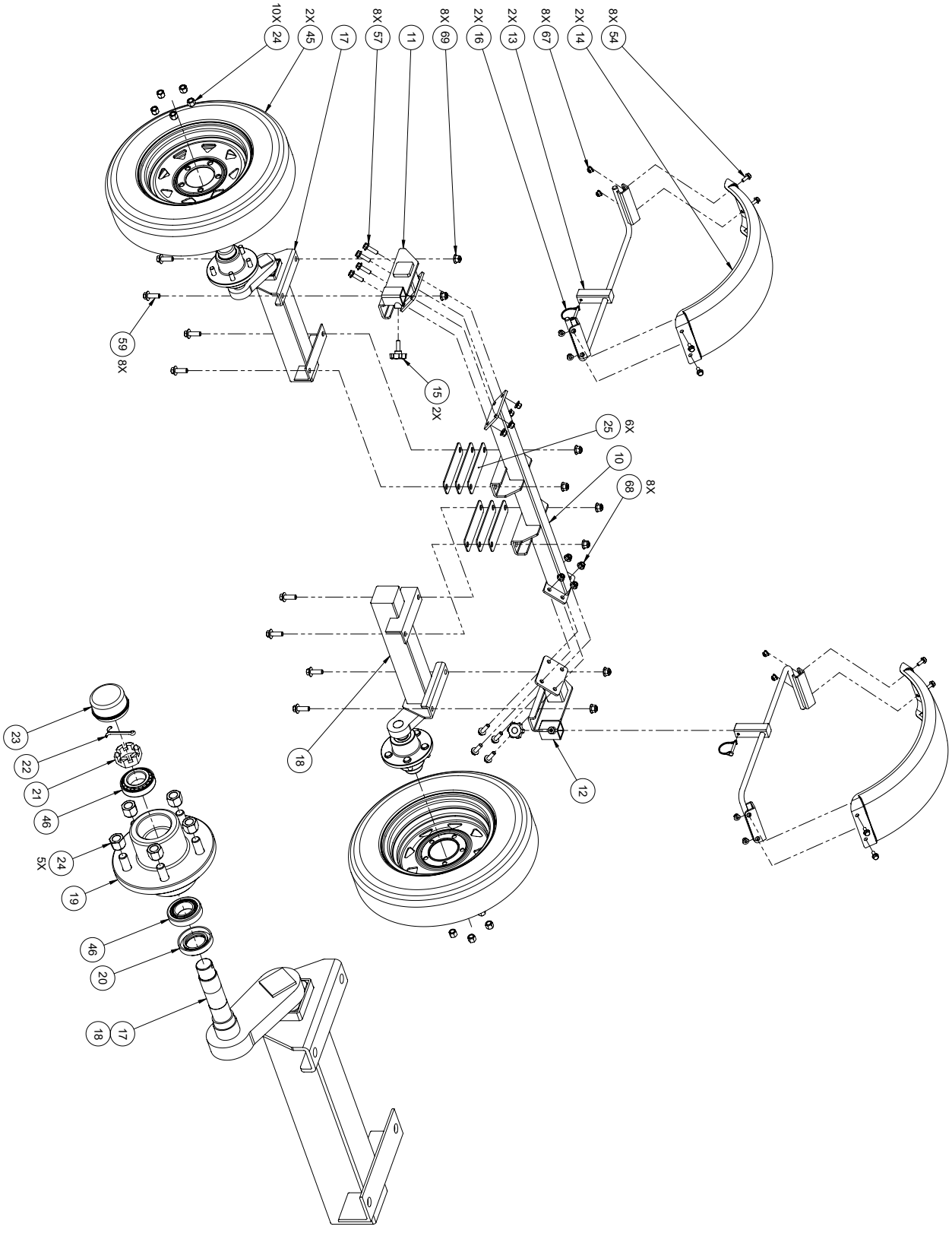

LIGHTING

NORTH AMERICA

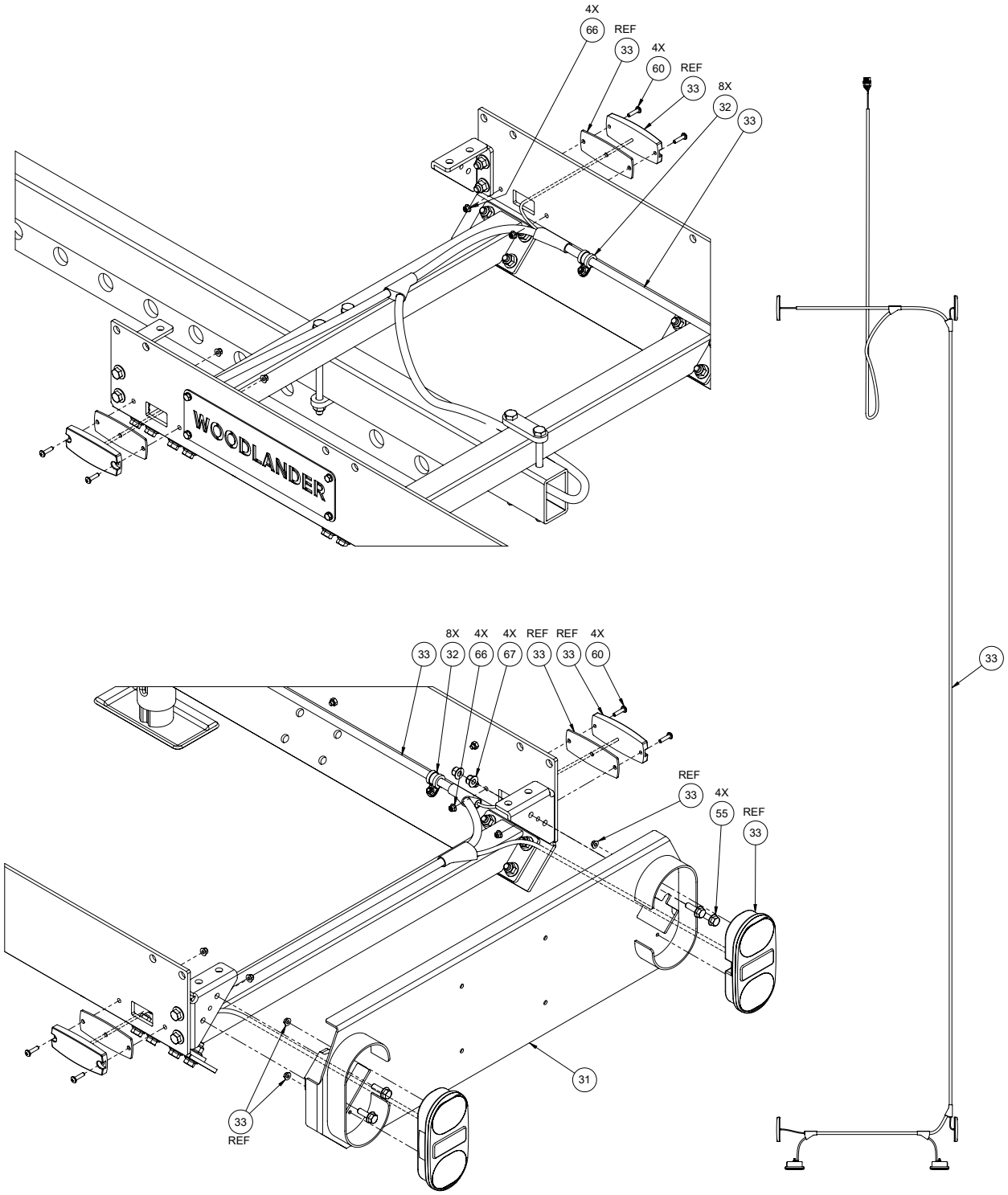

EUROPE

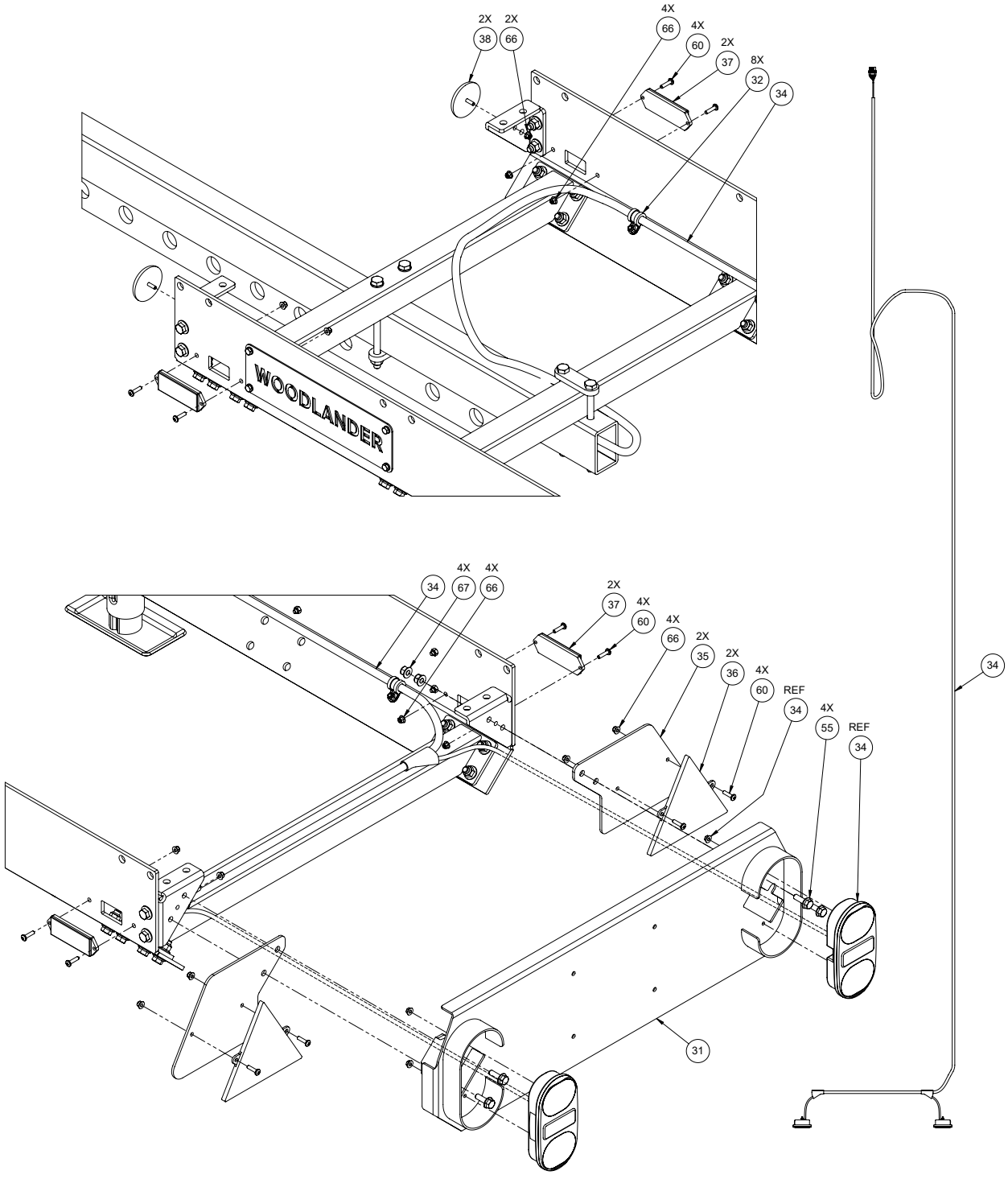
2X
38
2X
66
4X
66
4X
60
2X
37
8X
32
34
WOODLANDER
4X
34
4X
67
4X
66
2X
37
4X
60
4X
66
2X
35
2X
36
4X
60
REF
34
4X
55
REF
34
34
31

NAMEPLATES

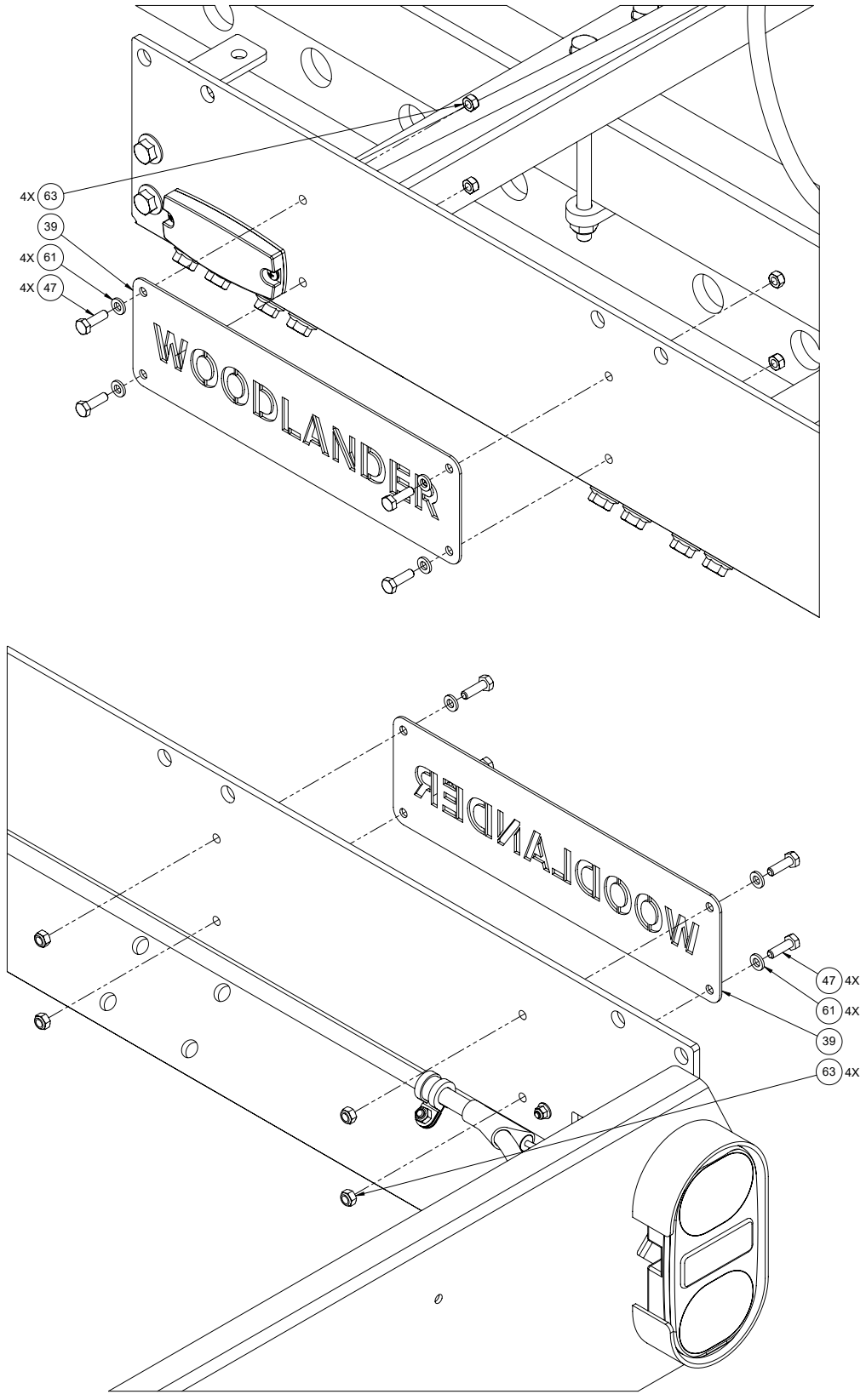

SWIVEL JACKS

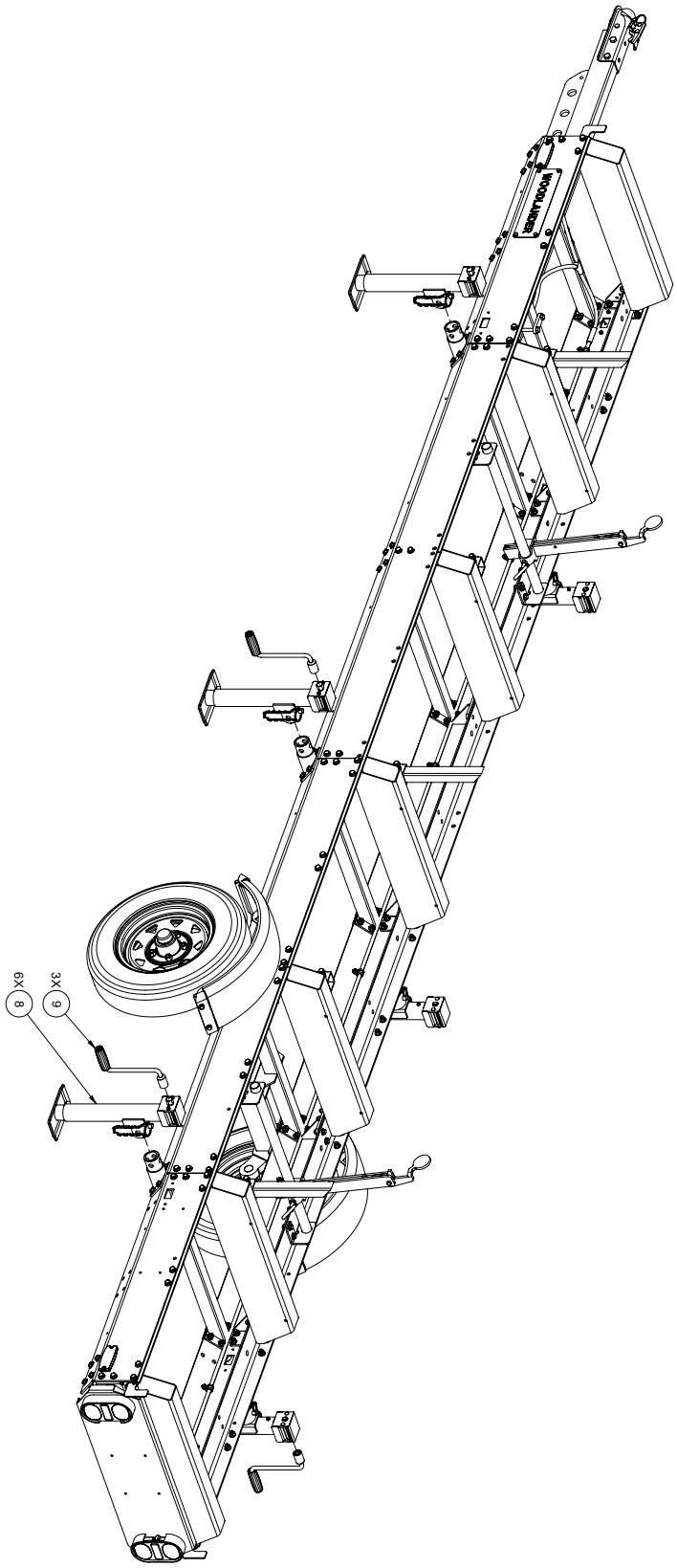

HEAD LOCK-DOWN

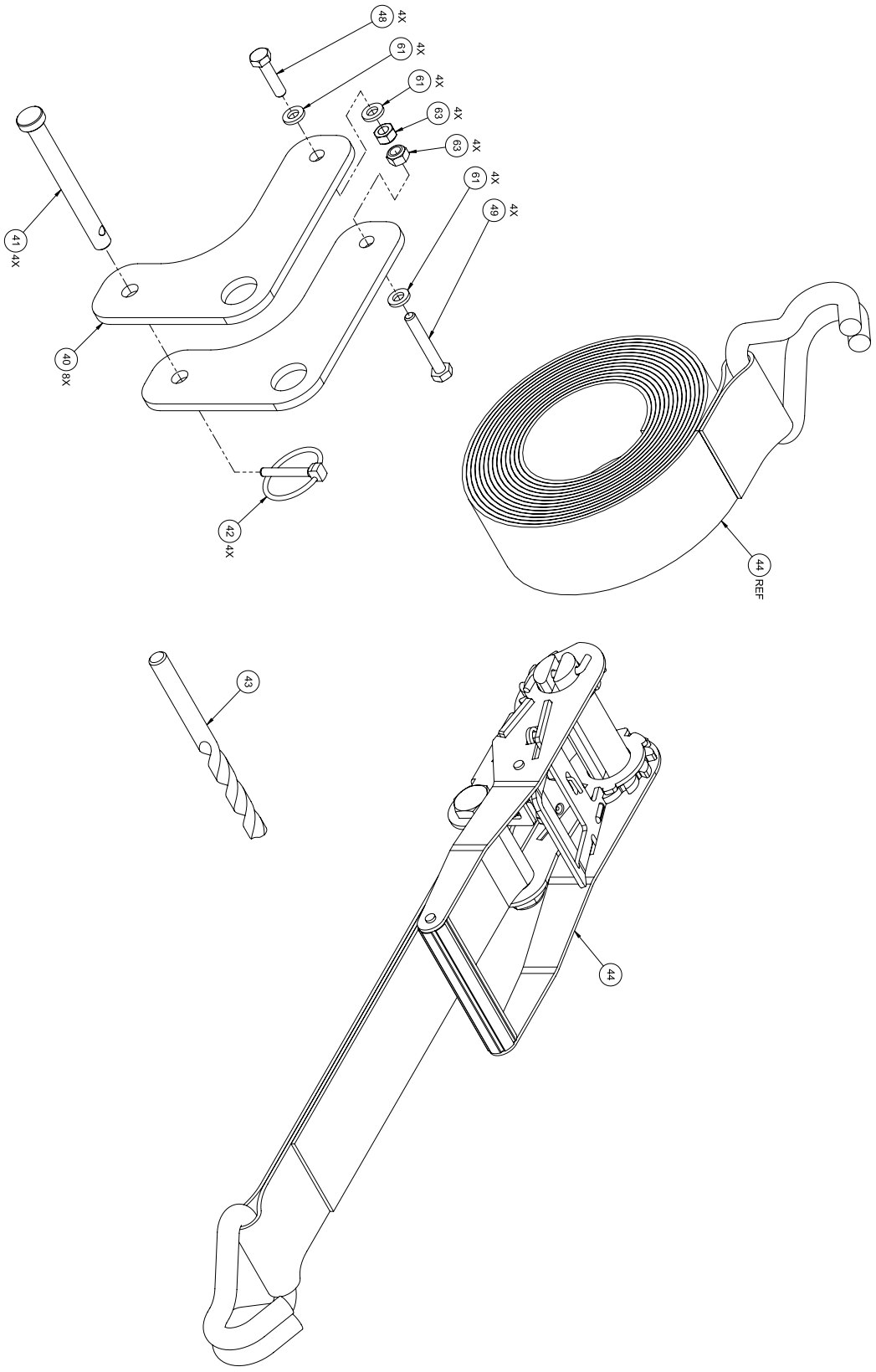

PARTS LISTS
NORTH AMERICA

Item	Quantity		Part No.	Description
	HM126 HM130	HM130 MAX		
1	4	4	0001373	GUSSET, END
2	10	10	0001374	GUSSET, JOINING
3	4	4	0001363	SIDE PLATE, LONG
4	4	4	0001364	SIDE PLATE, SHORT
5	6	-	0001369	CROSS BEAM
	-	6	0002900	CROSS BEAM, WOODLANDER MAX
6	1	-	0001370	CROSS BEAM, FRONT
	-	1	0002899	CROSS BEAM, FRONT, WOODLANDER MAX
7	6	6	0001376	JACK MOUNT
8	6	6	0006798	SWIVEL JACK, PIPE MOUNT, SIDEWIND HANDLE
9	3	3	0006800	CRANK HANDLE SOCKET DRIVE, ¾ in [19 mm], SWIVEL JACK
10	1	-	0001679	CROSS BEAM, AXLE
	-	1	0002898	CROSS BEAM, AXLE, WOODLANDER MAX
11	1	1	0001680	AXLE MOUNT W/ FENDER ADAPTER, LEFT
12	1	1	0001681	AXLE MOUNT W/ FENDER ADAPTER, RIGHT
13	2	2	0001683	BRACKET, METAL FENDER, 750/850/1000 kg AXLE
14	2	2	0001684	METAL FENDER, 5.30-12 WHEEL
15	2	2	0001698	KNOB, MULTI-LOBE, 48 mm OD, M10 X 1.5, 30 mm LG
16	3	2	0004728	LOCKING PIN, ROUND, 1/4 in DIA, 1-3/8 in USABLE LG, 2 in LG
17	1	1	0004528	AXLE, LEFT, 1000 kg
18	1	1	0004527	AXLE, RIGHT, 1000 kg
19	2	2	0001549	WHEEL HUB, 5-BOLT, 4-1/2 in [114.3 mm] BC, M12 X 1.5 LUGS
20	2	2	0004762	ROTARY SHAFT SEAL, SPRING-LOADED, WIPER LIP, 30 mm SHAFT, 50 mm OD
21	2	2	0006092	LOCK NUT, SLOTTED, M24 X 1.5, 16 mm THK
22	2	2	0004753	COTTER PIN, 5/32 in DIA, 1-1/2 in LG
23	2	2	0001439	WHEEL HUB DUST COVER, 5-BOLT, M12 LUGS
24	10	10	0006202	LUG NUT, M12 X 1.5
25	6	6	0001682	AXLE SHIM PLATE, 3 mm THK
26	1	1	0001371	TONGUE
27	2	2	0001372	TONGUE BRACKET
29	1	1	0001381	HITCH BALL COUPLER, 2 in [50.8 mm] BALL, NORTH AMERICA
30	1	1	0001382	SAFETY CHAIN
31	1	-	0001375	TAILLIGHT BRACKET
	-	1	0002901	TAILLIGHT BRACKET, WOODLANDER MAX
32	12	12	0001396	CABLE CLAMP, 1/2 in ID, 1-3/4 in LG
33	1	1	0001676-1	LIGHTING WIRING HARNESS, NA
39	2	2	0001886	WOODLANDER NAMEPLATE
40	8	8	0001990	HEAD LOCK-DOWN PLATE
41	4	4	0001394	LOCK-DOWN PIN
42	4	4	0004720	LINCH PIN, 4.5 mm DIA, 25 mm USEABLE LG, 32 mm LG
43	1	1	0004742	DRILL BIT, 10 mm, JOBBERS LG
44	1	1	0005146	RATCHET STRAP, 50 mm WD, 4500 mm LG

Item	Quantity		Part No.	Description
	HM126 HM130	HM130 MAX		
45	2	2	5.30-12	WHEEL, 5.30-12
46	4	4	L44649	ROLLER BEARING, TAPERED, 1-1/16 in SFT, 1-3/64 in HSG, .56 in WD
47	20	20	HHB-MBE075FCJ	HEX HEAD BOLT, CLS 8.8, M6 X 1, 20 mm LG, FULL
48	4	4	HHB-MBE080FCJ	HEX HEAD BOLT, CLS 8.8, M6 X 1, 25 mm LG, FULL
49	4	4	HHB-MBE095FCJ	HEX HEAD BOLT, CLS 8.8, M6 X 1, 40 mm LG, FULL
50	1	1	HHB-MBM095FCM	HEX HEAD BOLT, CLS 10.9, M10 X 1.5, 40 mm LG, FULL
51	4	4	HHB-MBM215PCM	HEX HEAD BOLT, CLS 10.9, M10 X 1.5, 160 mm LG, 26 mm LG THD
52	2	2	HHB-MBR125PCM	HEX HEAD BOLT, CLS 10.9, M12 X 1.75, 70 mm LG, 30 mm LG THD
54	8	8	FHH-MBJ075PCJ	HEX BOLT, FLANGED, CLS 8.8, M8 X 1.25, 20 mm LG, 16 mm LG THD
55	4	4	FHH-MBJ080FCJ	HEX BOLT, FLANGED, CLS 8.8, M8 X 1.25, 25 mm LG, FULL
56	172	172	FHH-MBM085FCM	HEX BOLT, FLANGED, CLS 10.9, M10 X 1.5, 30 mm LG, FULL
57	40	40	FHH-MBM090PCM	HEX BOLT, FLANGED, CLS 10.9, M10 X 1.5, 35 mm LG, 26 mm LG THD
58	16	16	FHH-MBM095PCM	HEX BOLT, FLANGED, CLS 10.9, M10 X 1.5, 40 mm LG, 26 mm LG THD
59	8	8	FHH-MBR090PCM	HEX BOLT, FLANGED, CLS 10.9, M12 X 1.75, 35 mm LG, 30 mm LG THD
60	8	12	PPH-MBA075FCE	SCREW, PPH, CLS 4.8, M5 X 0.8, 20 mm LG, FULL
61	32	32	FTW-MBE000AJ	FLAT WASHER, M6
62	6	6	FTW-MBM000AJ	FLAT WASHER, M10
63	28	28	HLN-MBECH	LOCK NUT, CLS 8, M6 X 1
64	5	5	HLN-MBMCL	LOCK NUT, CLS 10, M10 X 1.5
65	2	2	HLN-MBRCL	LOCK NUT, CLS 10, M12 X 1.75
66	8	14	FLN-MBACH	LOCK NUT, FLANGED, CLS 8, M5 X 0.8
67	12	12	FLN-MBJCH	LOCK NUT, FLANGED, CLS 8, M8 X 1.25
68	228	228	FLN-MBMCL	LOCK NUT, FLANGED, CLS 10, M10 X 1.5
69	8	8	FLN-MBRCL	LOCK NUT, FLANGED, CLS 10, M12 X 1.75

EUROPE

Item	Quantity		Part No.	Description
	HM126 HM130	HM130 MAX		
1	4	4	0001373	GUSSET, END
2	10	10	0001374	GUSSET, JOINING
3	4	4	0001363	SIDE PLATE, LONG
4	4	4	0001364	SIDE PLATE, SHORT
5	6	-	0001369	CROSS BEAM
	-	6	0002900	CROSS BEAM, WOODLANDER MAX
6	1	-	0001370	CROSS BEAM, FRONT
	-	1	0002899	CROSS BEAM, FRONT, WOODLANDER MAX
7	6	6	0001376	JACK MOUNT
8	6	6	0006798	SWIVEL JACK, PIPE MOUNT, SIDEWIND HANDLE
9	3	3	0006800	CRANK HANDLE SOCKET DRIVE, ¾ in [19 mm], SWIVEL JACK
10	1	-	0001679	CROSS BEAM, AXLE
	-	1	0002898	CROSS BEAM, AXLE, WOODLANDER MAX
11	1	1	0001680	AXLE MOUNT W/ FENDER ADAPTER, LEFT
12	1	1	0001681	AXLE MOUNT W/ FENDER ADAPTER, RIGHT
13	2	2	0001683	BRACKET, METAL FENDER, 750/850/1000 kg AXLE
14	2	2	0001684	METAL FENDER, 5.30-12 WHEEL
15	2	2	0001698	KNOB, MULTI-LOBE, 48 mm OD, M10 X 1.5, 30 mm LG
16	3	3	0004728	LOCKING PIN, ROUND, 1/4 in DIA, 1-3/8 in USABLE LG, 2 in LG
17	1	1	0004528	AXLE, LEFT, 1000 kg
18	1	1	0004527	AXLE, RIGHT, 1000 kg
19	2	2	0001549	WHEEL HUB, 5-BOLT, 4-1/2 in [114.3 mm] BC, M12 X 1.5 LUGS
20	2	2	0004762	ROTARY SHAFT SEAL, SPRING-LOADED, WIPER LIP, 30 mm SHAFT, 50 mm OD
21	2	2	0006092	LOCK NUT, SLOTTED, M24 X 1.5, 16 mm THK
22	2	2	0004753	COTTER PIN, 5/32 in DIA, 1-1/2 in LG
23	2	2	0001439	WHEEL HUB DUST COVER, 5-BOLT, M12 LUGS
24	10	10	0006202	LUG NUT, M12 X 1.5
25	6	6	0001682	AXLE SHIM PLATE, 3 mm THK
26	1	1	0001371	TONGUE
27	2	2	0001372	TONGUE BRACKET
29	1	1	0001702	HITCH BALL COUPLER, 50 mm [2 in] BALL, EUROPE
30	1	1	0001382	SAFETY CHAIN
31	1	-	0001375	TAILLIGHT BRACKET
	-	1	0002901	TAILLIGHT BRACKET, WOODLANDER MAX
32	12	12	0001396	CABLE CLAMP, 1/2 in ID, 1-3/4 in LG
34	1	1	0001676-2	LIGHTING WIRING HARNESS, EU
35	2	2	0001379	TRIANGLE REFLECTOR BRACKET, EU
36	2	2	0001390	REAR REFLECTOR, RED, EU
37	4	4	0001391	SIDE REFLECTOR, AMBER, EU
38	2	2	0001392	FRONT REFLECTOR, WHITE, EU
39	2	2	0001886	WOODLANDER NAMEPLATE
40	8	8	0001990	HEAD LOCK-DOWN PLATE
41	4	4	0001394	LOCK-DOWN PIN

Item	Quantity		Part No.	Description
	HM126 HM130	HM130 MAX		
42	4	4	0004720	LINCH PIN, 4.5 mm DIA, 25 mm USEABLE LG, 32 mm LG
43	1	1	0004742	DRILL BIT, 10 mm, JOBBERS LG
44	1	1	0005146	RATCHET STRAP, 50 mm WD, 4500 mm LG
45	2	2	5.30-12	WHEEL, 5.30-12
46	4	4	L44649	ROLLER BEARING, TAPERED, 1-1/16 in SFT, 1-3/64 in HSG, .56 in WD
47	20	20	HHB-MBE075FCJ	HEX HEAD BOLT, CLS 8.8, M6 X 1, 20 mm LG, FULL
48	4	4	HHB-MBE080FCJ	HEX HEAD BOLT, CLS 8.8, M6 X 1, 25 mm LG, FULL
49	4	4	HHB-MBE095FCJ	HEX HEAD BOLT, CLS 8.8, M6 X 1, 40 mm LG, FULL
50	1	1	HHB-MBM095FCM	HEX HEAD BOLT, CLS 10.9, M10 X 1.5, 40 mm LG, FULL
51	4	4	HHB-MBM215PCM	HEX HEAD BOLT, CLS 10.9, M10 X 1.5, 160 mm LG, 26 mm LG THD
53	2	2	HHB-MBR155PCM	HEX HEAD BOLT, CLS 10.9, M12 X 1.75, 100 mm LG, 30 mm LG THD
54	8	8	FHH-MBJ075PCJ	HEX BOLT, FLANGED, CLS 8.8, M8 X 1.25, 20 mm LG, 16 mm LG THD
55	4	4	FHH-MBJ080FCJ	HEX BOLT, FLANGED, CLS 8.8, M8 X 1.25, 25 mm LG, FULL
56	172	172	FHH-MBM085FCM	HEX BOLT, FLANGED, CLS 10.9, M10 X 1.5, 30 mm LG, FULL
57	40	40	FHH-MBM090PCM	HEX BOLT, FLANGED, CLS 10.9, M10 X 1.5, 35 mm LG, 26 mm LG THD
58	16	16	FHH-MBM095PCM	HEX BOLT, FLANGED, CLS 10.9, M10 X 1.5, 40 mm LG, 26 mm LG THD
59	8	8	FHH-MBR090PCM	HEX BOLT, FLANGED, CLS 10.9, M12 X 1.75, 35 mm LG, 30 mm LG THD
60	8	12	PPH-MBA075FCE	SCREW, PPH, CLS 4.8, M5 X 0.8, 20 mm LG, FULL
61	32	32	FTW-MBE000AJ	FLAT WASHER, M6
62	6	6	FTW-MBM000AJ	FLAT WASHER, M10
63	28	28	HLN-MBECH	LOCK NUT, CLS 8, M6 X 1
64	5	5	HLN-MBMCL	LOCK NUT, CLS 10, M10 X 1.5
65	2	2	HLN-MBRCL	LOCK NUT, CLS 10, M12 X 1.75
66	8	14	FLN-MBACH	LOCK NUT, FLANGED, CLS 8, M5 X 0.8
67	12	12	FLN-MBJCH	LOCK NUT, FLANGED, CLS 8, M8 X 1.25
68	228	228	FLN-MBMCL	LOCK NUT, FLANGED, CLS 10, M10 X 1.5
69	8	8	FLN-MBRCL	LOCK NUT, FLANGED, CLS 10, M12 X 1.75

NOTES

This page intentionally left blank.


WOODLAND
MILLS
DISCOVER THE WOODLAND™