HM122 PORTABLE SAWMILL

7 and 9.5 Horsepower Models

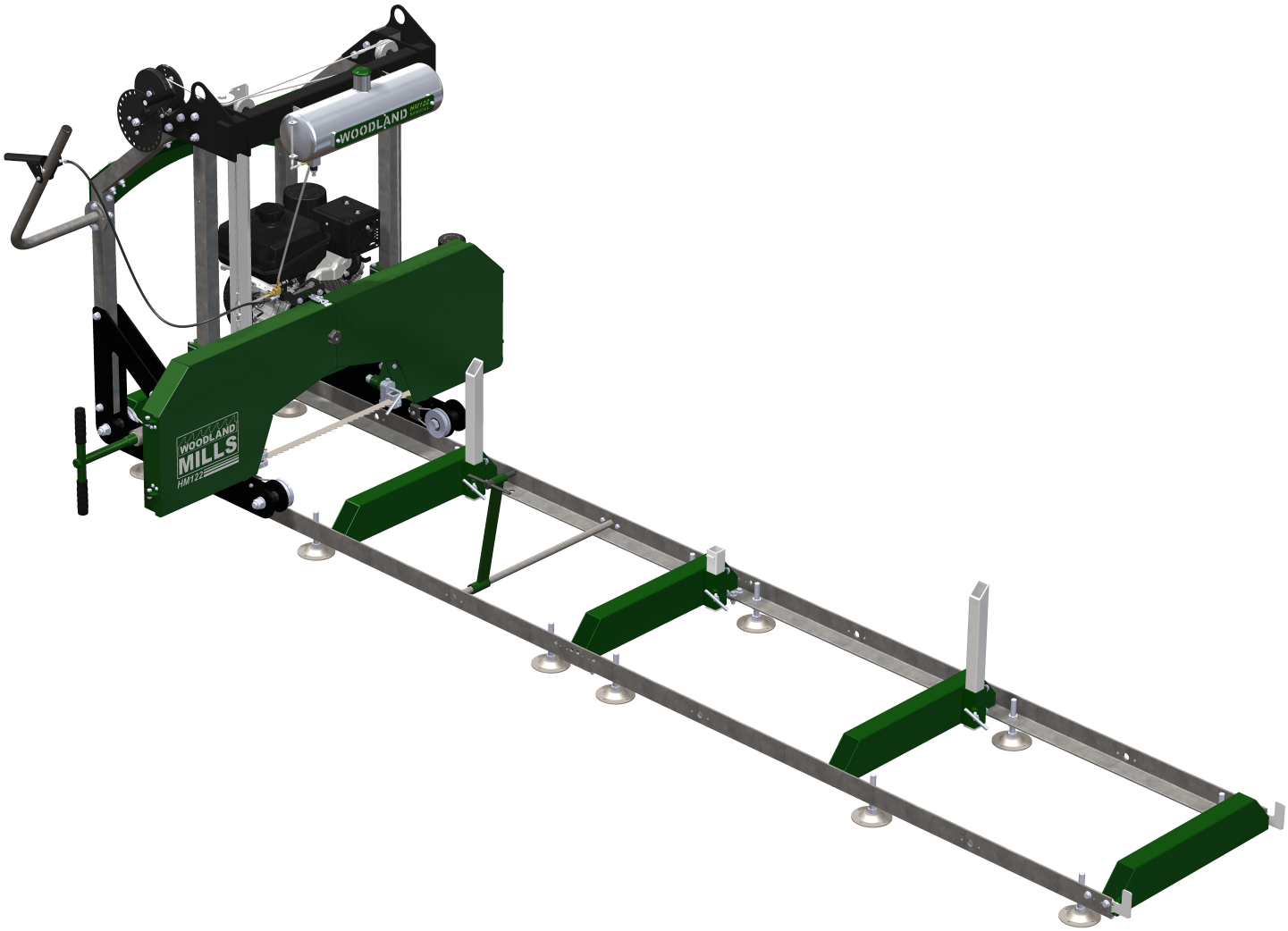

OPERATOR'S MANUAL

HM122-MY2020-EN: Rev D
Publication Date: 07-Aug-2020

WOODLAND MILLS

This page intentionally left blank.

TABLE OF CONTENTS

TABLE OF CONTENTS 1
INTRODUCTION 4
INTENDED USE 4
SAFETY GUIDELINES 5
WORK AREA 6
INTERNAL COMBUSTION ENGINE SAFETY 6
PERSONAL SAFETY 7
TOOL USE AND CARE 8
EQUIPMENT OPERATION 9
MAINTENANCE 10
TECHNICAL SPECIFICATIONS 11
OVERALL DIMENSIONS 12
ASSEMBLY 13
1. TOOLS REQUIRED 13
2. UNPACKING 14
3. TRACK 15
4. LOG CLAMP AND SUPPORTS 19
5. SAWMILL HEAD ASSEMBLY 21
FRONT POSTS 21
CARRIAGE LEGS 23
HEAD LOCK-DOWN PLATES 24
STANDING THE SAWHEAD UPRIGHT 25
REAR POSTS 26
CROSS BEAM 27
LIFT MECHANISM & LIFT CABLE 29
LUBRICATION TANK & TUBING 32
LOG SCALE 35
DASHBOARD 38
HOUR METER 39

PUSH HANDLE 40
THROTTLE HANDLE AND CABLE 42
BAND WHEEL DOOR LATCHES 44
TIGHTEN CARRIAGE WHEEL BOLTS 45
6. PLACING THE HEAD ON THE TRACK 46
METHOD 1 46
METHOD 2 47
ROLLING THE SAWMILL HEAD ASSEMBLY 48
LEVELLING THE SAWMILL HEAD ASSEMBLY 49
ADJUST THE POST SLEEVE BUSHINGS 50
GREASING THREADS 51
ENGINE OIL 52
DIRECTION OF CUT 54
SAWMILL SET-UP PROCEDURES 55
DRIVE BELT TENSION 55
BLADE TENSION 57
BLADE TRACKING 58
REDUCING THE BLADE TENSION 59
ADJUSTING THE FOLLOWER SIDE TRACKING 60
BLADE GUIDE ADJUSTMENT 62
SAWMILL MAINTENANCE 64
CHANGING THE BLADE 64
REPLACING BELTS 65
TROUBLESHOOTING 68
PARTS LIST 69
EXPLODED ASSEMBLY VIEWS 74
TRACK 74
SAWHEAD 75
BACK BEAM 76
GUIDE BLOCKS 77
BAND WHEEL HOUSING 78

BAND WHEEL HOUSING DOORS _____79
BAND WHEELS AND BELT TENSIONER _____80
ENGINE COMPONENTS—9.5 hp _____81
ENGINE COMPONENTS—7 hp_____82
CARRIAGE_____83
CROSS BEAM _____84
CARRIAGE LEG, WHEEL, AND SWEEPER _____85
WINCH _____86
THROTTLE HANDLE _____87
CABLES, TUBING & LABELS _____88
NOTES _____89

INTRODUCTION

Congratulations on your purchase and welcome to Woodland Mills! This manual gives you the necessary information about your machine so you will be able to use it properly. The entire manual must be read and understood before you start using the machine. If any questions should arise that are not covered by this manual, please contact Woodland Mills Inc.

OWNER'S RECORD

Please take a moment to record the following information about your sawmill. If you need to call for assistance, please be ready to provide your model and serial numbers. This information will allow us to help you more quickly when you call.

MODEL NUMBER

SERIAL NUMBER

DATE OF PURCHASE

This machine is designed for certain applications only. We strongly recommend that this machine is not modified and/or used for any application other than that for which it was designed. If you have any questions relative to a particular application, DO NOT use the machine until you have first contacted us to determine if it can or should be performed on the product.

For technical questions and replacement parts, please contact Woodland Mills Inc.

INTENDED USE

Woodland Mills wood sawmills are designed for acreage owners to aid in the milling of natural, untreated wood with the mill firmly supported on the ground. Materials that are processed may contain chemicals or by-products that could corrode the machine or damage it, resulting in safety concerns.

SAFETY GUIDELINES

****SAVE THESE INSTRUCTIONS****



WARNING!

Read and understand all instructions. Failure to follow all instructions listed below may result in electric shock, fire, and/or serious injury.



WARNING!

The warnings, cautions, and instructions discussed in this instruction manual cannot cover all possible conditions or situations that could occur. It must be understood by the operator that common sense and caution are factors which cannot be built into this product but must be supplied by the operator.



WARNING!

Only operate the engine in a well ventilated area. Carbon Monoxide (CO) produced by the engine during use can kill. Do not use indoors, near windows, or in other sheltered areas.

NOTE: All Federal and State laws and any regulation having jurisdiction covering the safety requirements for use of the machine take precedence over the statements in this manual. Users of this machine must adhere to such regulations.

WORK AREA

- **Keep work area clean, free of clutter and well lit.** Cluttered and dark work areas can cause accidents.
- **Do not use your sawmill where there is a risk of causing a fire or an explosion;** e.g. in the presence of flammable liquids, gasses, or dust. Power tools create sparks which may ignite the dust or fumes.
- **Keep children and bystanders away** while operating a power tool. Distractions can cause you to lose control, therefore, visitors should remain a safe distance from the work area.
- **Be aware of all power lines,** electrical circuits, water pipes and other mechanical hazards in your work area, particularly those hazards below the work surface hidden from the operator's view that may be unintentionally contacted and cause personal harm or property damage.
- **Be alert of your surroundings.** Using power tools in confined work areas may put you dangerously close to cutting tools and rotating parts.

INTERNAL COMBUSTION ENGINE SAFETY

WARNING!

Internal combustion engines present special hazards during operation and fuelling. Read and follow the warning instructions in the engine Owner's Manual and the safety guidelines below. Failure to follow the warnings and safety standards could result in severe injury or death.



- **DO NOT** run the machine indoors or in an enclosed area such as a deep trench unless adequate ventilation, through such items as exhaust fans or hoses, is provided. Exhaust gas from the engine contains poisonous carbon monoxide gas (CO); exposure to carbon monoxide can cause loss of consciousness and may lead to death.
- **DO NOT** smoke while operating the machine.
- **DO NOT** smoke when refuelling the engine.
- **DO NOT** refuel a hot or running engine.
- **DO NOT** refuel the engine near an open flame.
- **DO NOT** spill fuel when refuelling the engine.
- **DO NOT** run the engine near an open flame.
- **ALWAYS** refill the fuel tank in a well-ventilated area.
- **ALWAYS** replace the fuel tank cap after refuelling.
- **ALWAYS** check the fuel lines and the fuel tank for leaks and cracks before starting the engine. Do not run the machine if fuel leaks are present or the fuel lines are loose.
- **ALWAYS** avoid contact with hot fuel, oil, and exhaust fumes.

PERSONAL SAFETY

- **Stay alert, watch what you are doing and use common sense when operating a power tool.** Do not use a power tool when you are tired or under the influence of drugs, alcohol, or medication. A moment of inattention while operating power tools may result in serious personal injury.
- **Dress properly.** Do not wear loose clothing, dangling objects, or jewelry. Keep your hair, clothing, and gloves away from moving parts. Loose clothes, jewelry, or long hair can be caught in moving parts. Air vents often cover moving parts and should be avoided.
- **Use safety apparel and equipment.** Use safety goggles or safety glasses with side shields which comply with current national standards, or when needed, a face shield. Use a dust mask in dusty work conditions. This applies to all persons in the work area. Also use non-skid safety shoes, hardhat, gloves, dust collection systems, and hearing protection when appropriate.
- **Do not overreach.** Keep proper footing and balance at all times.
- **Remove adjusting keys or wrenches** before connecting to the power supply or turning on the tool. A wrench or key that is left attached to a rotating part of the tool may result in personal injury.
- **Never make blade guide adjustments, remove or install blades, or conduct any other maintenance or make any other adjustments while the engine is running.** Always shut the engine off, remove the ignition key, and turn the engine off before carrying out any of the aforementioned procedures. Consult your engine manual for safe shutdown procedures to prevent accidental ignition.

TOOL USE AND CARE

- **Always** be sure the operator is familiar with proper safety precautions and operation techniques before using machine.
- **Never touch** the engine or muffler while the engine is on or immediately after it has been turned off. These areas get extremely hot and can cause burns.
- **Always** close the fuel valve on the engine when the machine is not in use.
- **Do not force the tool.** Tools do a better and safer job when used in the manner for which they are designed.
- **Never use the sawmill** with a malfunctioning switch or throttle. Any power tool that cannot be controlled with the switch is dangerous and must be repaired before using.
- Turn off the engine and place the switch in the locked or off position before servicing, adjusting, installing accessories or attachments, or storing. Such preventive safety measures reduce the risk of starting the power tool accidentally.
- Secure logs with the log screw clamping device instead of with your hand or another individual's help. This safety precaution allows for proper tool operation using both hands.
- **Storing sawmill.** When the sawmill is not in use, store it in a dry, secure place or keep well covered and out of the reach of children. Inspect the sawmill for good working condition prior to storage and before re-use.
- **Maintain your sawmill.** It is recommended that the general condition of the sawmill be examined before it is used. Keep your sawmill in good repair by adopting a program of conscientious repair and maintenance in accordance with the recommended procedures found in this manual. If any abnormal vibrations or noise occurs, turn the sawmill off immediately and have the problem corrected before further use.
- **Keep saw blades sharp and clean.** Properly maintained bandsaw blades are less likely to bind and are easier to control.
- **Cleaning and Lubrication.** Use only soap and a damp cloth to clean your sawmill. Many household cleaners are harmful to plastic and rubber components on the sawmill.
- **Use only accessories that are recommended** by the manufacturer for your model. Accessories that may be suitable for another sawmill may create a risk of injury when used on the sawmill.
- **Always** operate machine with all safety devices and guards in place and in working order. DO NOT modify or make changes to safety devices. DO NOT operate machine if any safety devices or guards are missing or inoperative.
- **Never leave sawmill running unattended.**
- **Coiled blades can spring apart with considerable force and unpredictably in any direction.** Always deal with coiled blades, including those packaged in boxes, with the utmost care.
- **Never use the equipment to cut anything other than lumber** or for any purpose other than cutting lumber as described in this manual.

EQUIPMENT OPERATION

1. Wear heavy-duty work gloves, ANSI-approved goggles behind a full face shield, steel-toed work boots, and a dust mask.
2. Operate only with assistance.
3. Cut-off branches from the lumber to be processed.
4. Place the lumber to be cut on the track supports.
5. Clamp the lumber firmly in place using the included log clamp and supports.
6. Fill the lubrication tank with clean water. Add a ¼ cup of liquid dish soap per full tank; add less if topping up a partially full tank. The soap helps keep the blade clean(er) when excess tree oils and sap are encountered.
7. Start and operate the engine according to the provided engine manual.
8. Depress the throttle to bring the blade up to speed—the throttle should be fully depressed while the saw is under load.
9. Roll the head assembly slowly along the track and against the lumber to make the cut.
10. Trim off the rounded sides of the log.
11. When the log is squared-off, boards or posts can be cut to standard or custom specifications.
12. To prevent accidents, turn off the engine and disconnect its spark plug wire after use. Wait for the engine to cool, clean external parts with a clean cloth, then store the equipment out of children's reach.



WARNING!

To avoid death or serious injury, do not cut lumber containing embedded foreign objects such as nails, metal fragments, etc.



WARNING!

The operator and any assistants must stay clear of the front and back of the blade whenever the engine is on.

MAINTENANCE

Proper and routine maintenance is critical to operator safety, achieving good milling results, and to prolong the life of your investment.

- **Band Wheel Bearings** — Inspect before use to ensure they are not worn. Bearings are sealed and do not need to be greased.
- **Blade Guide Bearings** — Inspect before use for excessive grooves or scoring in the bearing case. Replace if necessary.
- **Blade Tension** — Grease threads of tensioning T-handle when dry or as required. Use multi-purpose, extreme-pressure grease.
- **Log Clamp** — Spray the cam mechanism with dry silicone spray frequently.
- **Belts** — Periodically check the condition and wear of the drive and idler belt. Ensure that the blade does not ride on the band wheels.
- **Drive Belt** — Periodically check the tension of the drive belt.
- **Carriage Posts (Front)** — Spray posts before use with a silicone spray lubricant such as 3-in-1 or Jig-A-Loo.
- **Band Wheel Guards** — Routinely remove any build-up of sawdust that may collect inside the band wheel guards.
- **Lubrication Tank** — Only fill with a water and dish soap mixture, or in winter months use windshield washer fluid. Do not leave lubricant in tank if temperature falls below 0˚ C.
- **Blade Lubricant** — Never use diesel fuel or kerosene as blade lubricant. These substances lead to premature wear of your belts and poor sawing performance. For winter operation, replace the water lubricant with windshield washer fluid.
- **Engine** — Check the engine oil level before each use and maintain the engine per the instructions set out by the engine manufacturer in the engine manual. The engine is equipped with an oil alert system and will not start without adding oil before starting.
- **Lifting Cables** — Before, during, and after operation, regularly inspect the cables for any wear or kinks. Ensure that the cables are in perfect condition. Oil the coiled part of the cable often to prevent premature wear. Replace with new cables as necessary.

TECHNICAL SPECIFICATIONS

The HM122 sawmill comes in two variants: the ***HM122-7*** that utilizes a 7 horsepower engine and the ***HM122-9.5*** with a 9.5 horsepower engine. Both versions are assembled and operated in the same manner. Pictures and graphics used in this manual display the HM122-9.5 sawmill but the instructions still apply to both.

Item	HM122-7 Specification	HM122-9.5 Specification
Gasoline Engine	7 hp Kohler Command Pro	9.5 hp Kohler Command Pro
Max Log Diameter	22 in [559 mm]	
Max Board Width	20 in [508 mm]	
Max Board Thickness	6 in [152 mm]	
Blade Size	1-¼ x 125 in [32 mm x 3175 mm]	
Track Length	153-½" [3899 mm]	
Track Width	26 in [660 mm]	
Track Height Adjustability (top of bunk)	7-⅞ to 10-⅝ in [200 to 270 mm]	
Product Weight	589 lb [267 kg]	615 lb [279 kg]
Shipping Weight	693 lb [314 kg]	720 lb [327 kg]

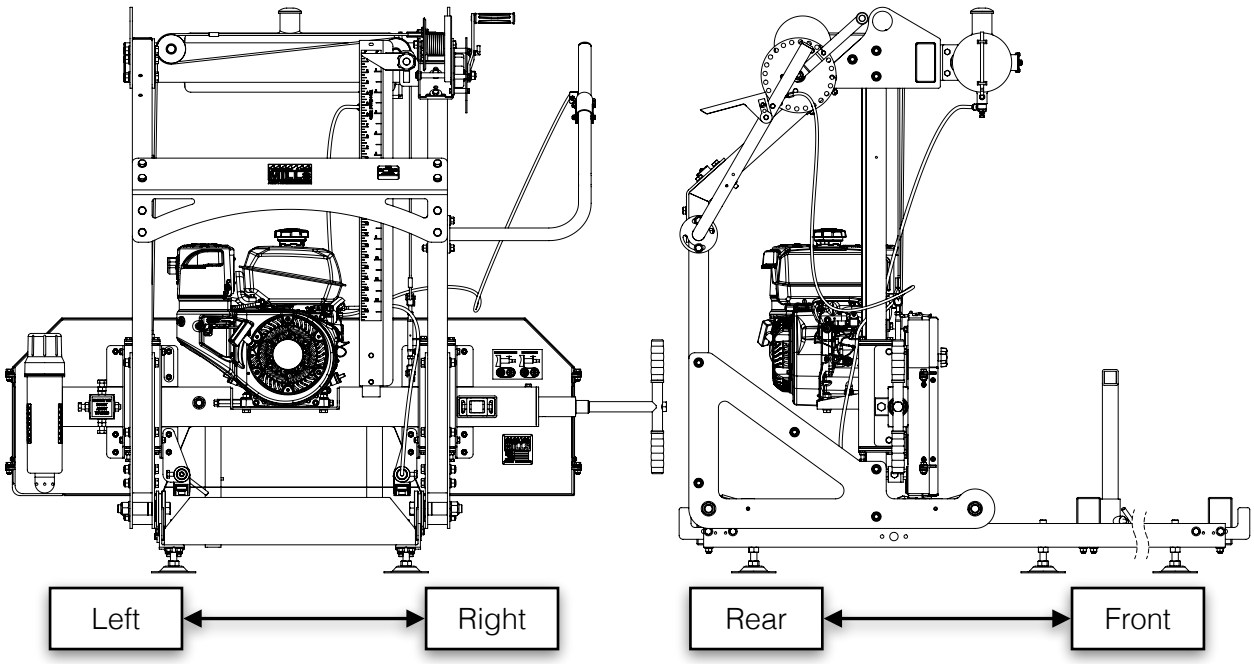

OVERALL DIMENSIONS

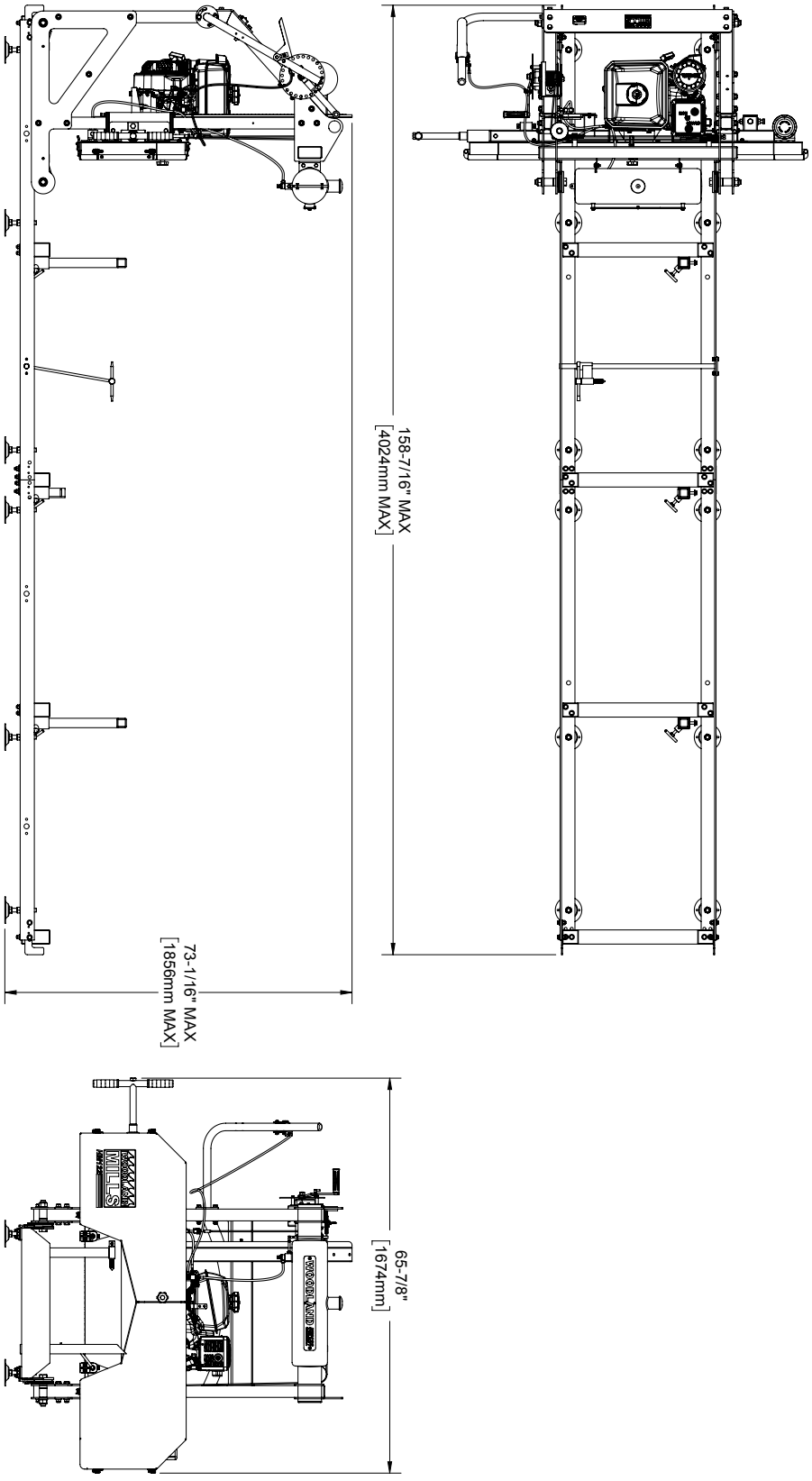

ASSEMBLY

1. TOOLS REQUIRED

Tool	Specification
Wrench/Socket	7 mm (2X)
Wrench/Socket	10 mm (2X)
Wrench/Socket	13 mm (2X)
Wrench/Socket	14 mm (2X)
Wrench/Socket	15 mm (2X)
Wrench/Socket	16 mm (2X)
Wrench/Socket	17 mm (2X)
Wrench/Socket	18 mm (2X)
Wrench/Socket	19 mm (2X)
Wrench	24 mm or Adjustable Wrench (2X)
Wrench	30 mm or Adjustable Wrench (2X)
Hex Key	3 mm
Hex Key	4 mm
Phillips Head Screwdriver	No. 3
Torque Wrench	Capable of at least 25 ft•lb (34 N•m)
Tape Measure	Standard Inch/Metric Tape Measure

During several of the assembly steps, more than one socket or wrench of the same size may be required to assemble the hardware. A socket or box wrench in combination with an adjustable wrench can be utilized if multiple same size tools are in limited supply.

2. UNPACKING

Unpack the contents of the crate except for the sawhead and the two long boxes in the bottom that contain the sections of track. Unfasten the two (2) M8 bolts/nuts on the front of the crate using a socket/wrench. Place two (2) 6-8 in [150-200 mm] tall support blocks in front of the crate, bend the front of the crate down, and then lay the cardboard wall over it. Carefully rotate the sawhead down onto the cardboard and support blocks and slide it out of the crate as shown below.

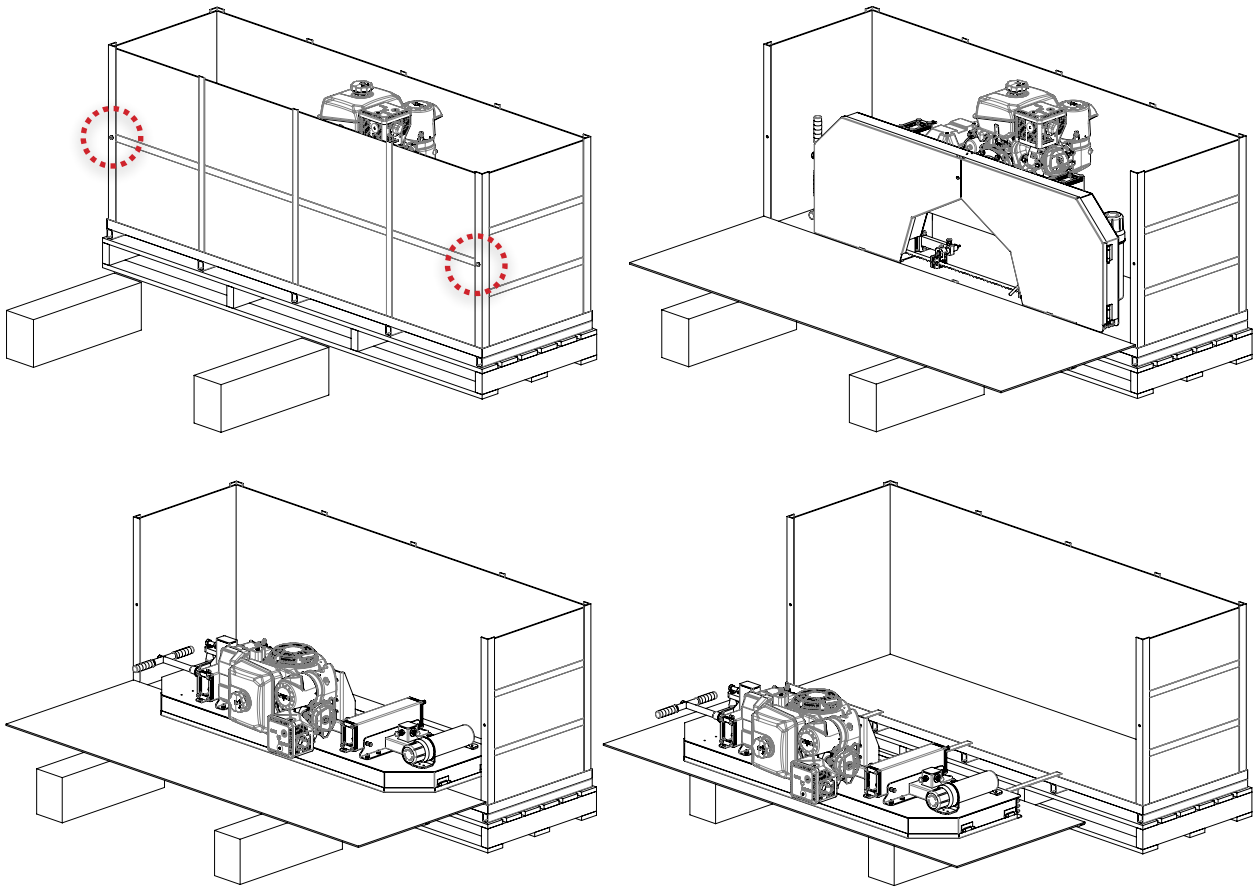

The two long track boxes can now be removed and the crate discarded.

3. TRACK

Assemble the track system with the provided components and hardware listed in the table below. It is important to assemble and level the track on a firm foundation before tightening all of the hardware and it should ideally be a minimum of 4 in [100 mm] off the ground. This will allow for easy cleanup of sawdust from under the tracks and height adjustment of the log supports.

12x	M10 X 30 mm Flanged Hex Bolt	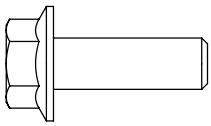	4x	Track Rail	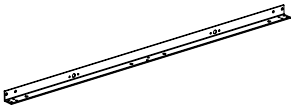
30x	M10 X 25 mm Flanged Hex Bolt	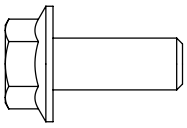	2x	Reinforcement Plate	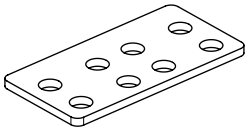
36x	M10 Flanged Lock Nut	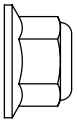	4x	Carriage Stop	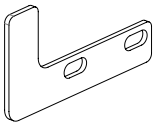
			2x	End Bunk	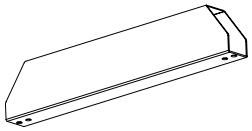
			3x	Mid Bunk	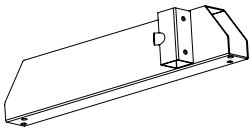
			12x	Track Foot	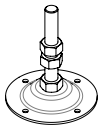



If a Woodland Mills sawmill trailer was purchased with this sawmill, skip this track assembly section and follow the track assembly instructions in those manuals.



The track comes completely disassembled from the factory. Lay out all the components on a flat piece of level ground prior to assembly. See the ***TRACK*** exploded view for a more detailed part breakdown.

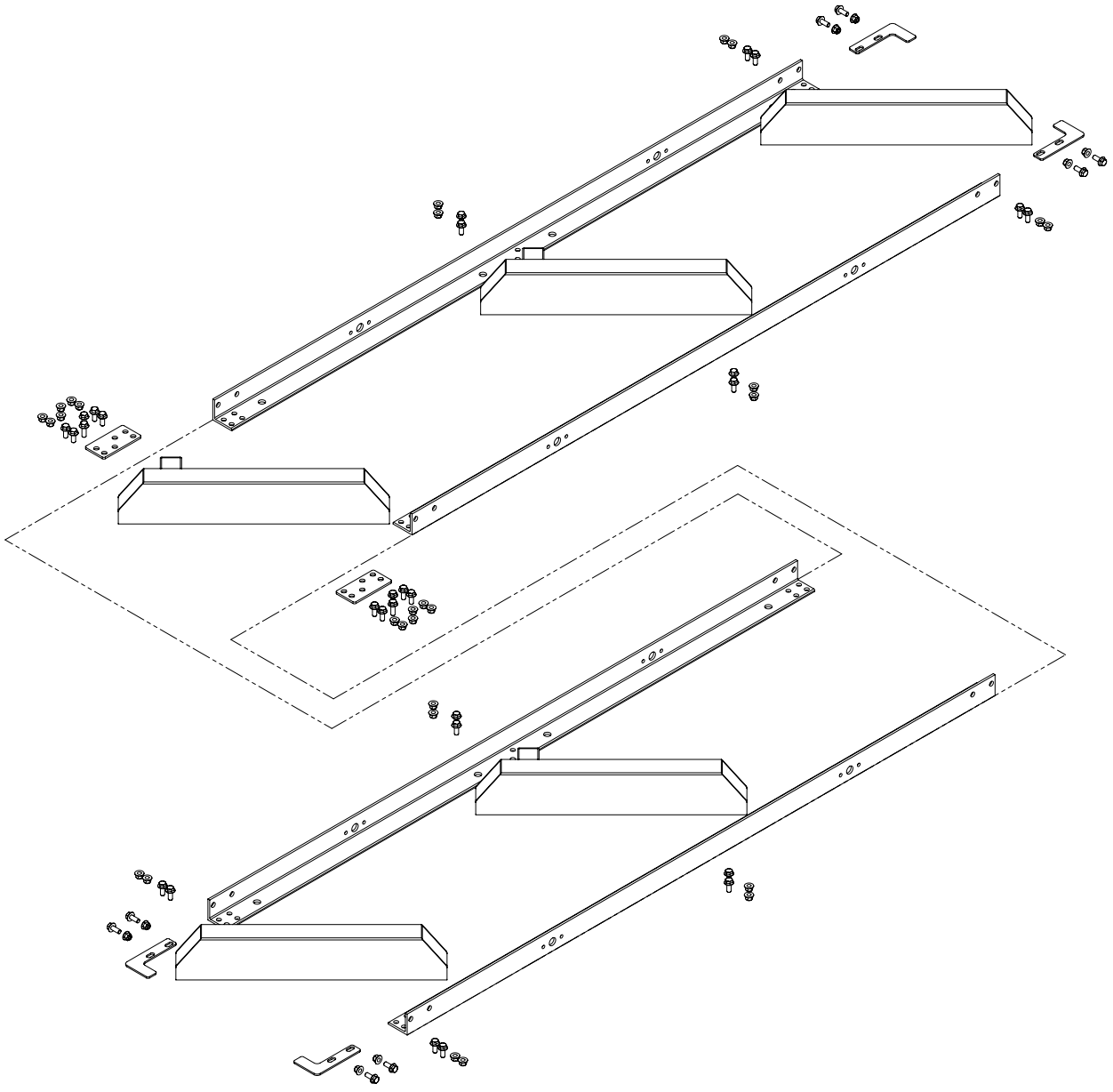

When assembling the log bunks to the rails, ensure that the two end bunks are square (90°) as shown in **Figure 1**. Use sixteen (16) M10 X 25 mm bolts at both end bunks and the two(2) mid bunks excluding the mid bunk at the rail joint (**Figures 1 & 2**).

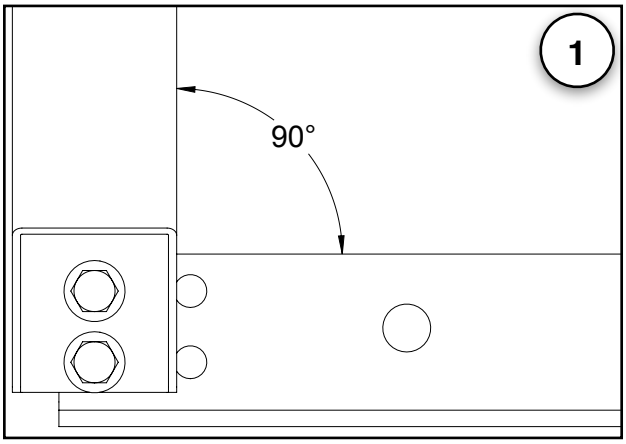

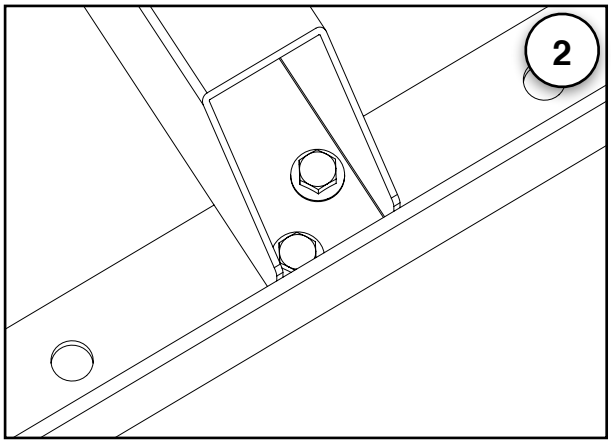

Use twelve (12) M10 X 30 mm bolts and lock nuts to join the centre bunk and reinforcement plates to the rails at the rail joints. Sandwich the rails between the bunk and reinforcement plate (**Figure 3**).

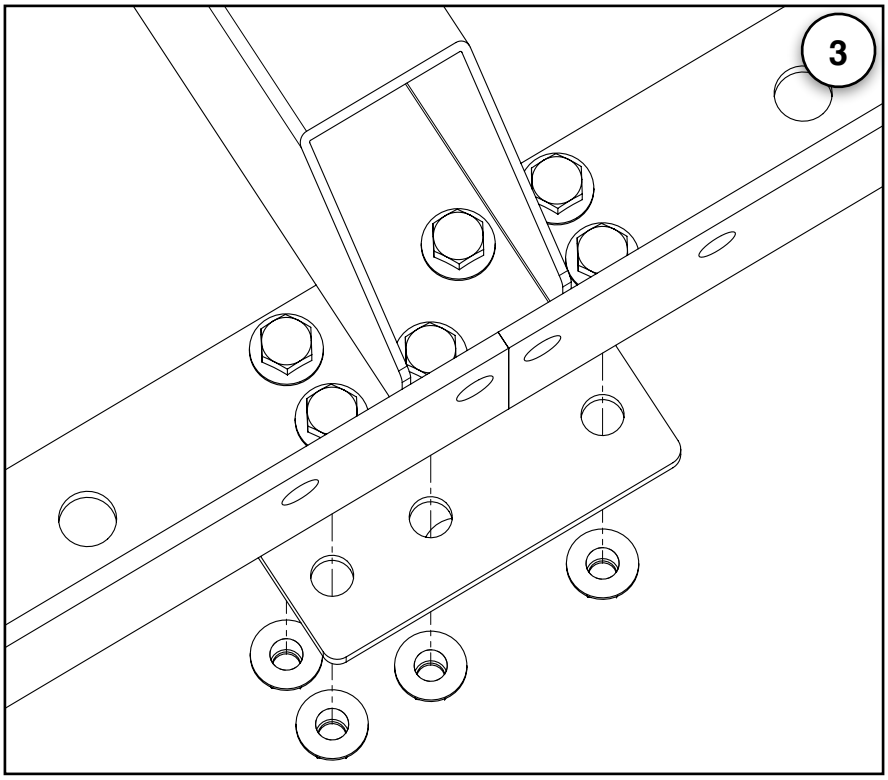

Attach the twelve (12) levelling feet to the track at the locations shown below. The bolt can be turned to either raise or lower the foot to adjust the level of the track (**Figure 4**). If setting the track on wooden blocks, use wood screws in the four holes in the foot base to secure each foot in place.

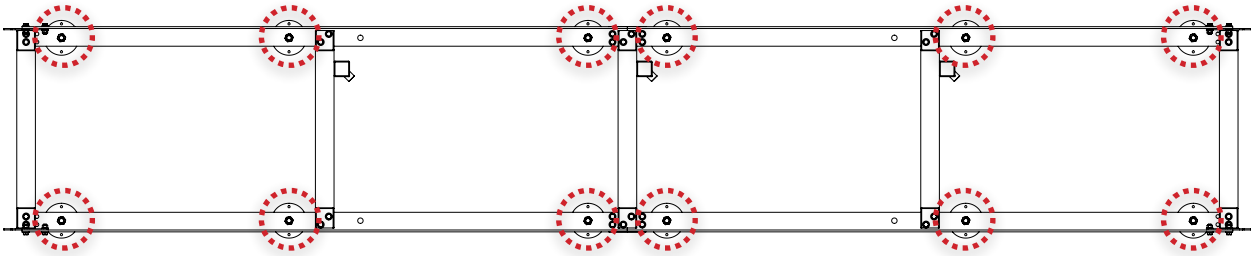

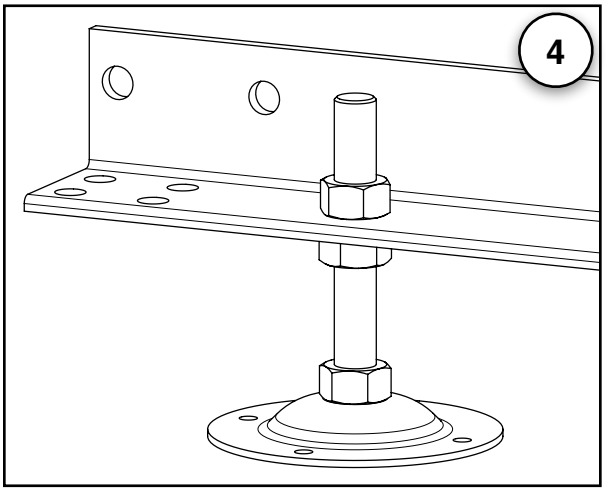

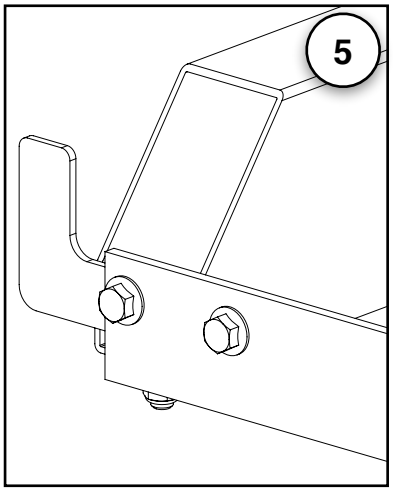

Assemble the four (4) carriage stops to the ends of the rails using eight (8) M10 X 25 mm bolts and lock nuts. Ensure carriage stops are assembled to the inside face of the rails, *not* the outside (Figure 4).

The assembled track should measure 26 in [660 mm] wide when measuring from the outside faces of the rails.

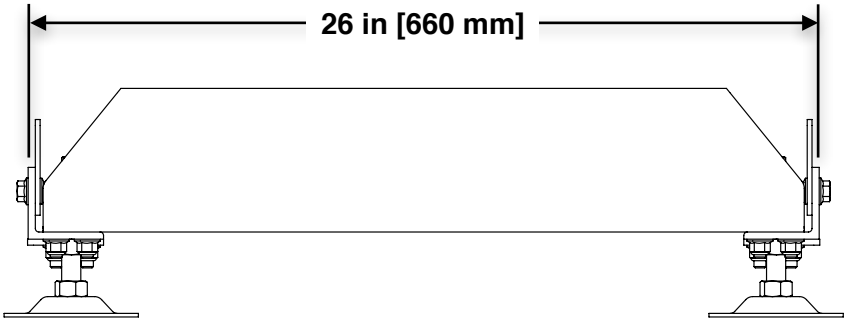

4. LOG CLAMP AND SUPPORTS

Assemble the log clamp components as shown below. Attach the completed assembly to the track using two (2) M10 X 25 mm bolts with lock nuts. Fully tighten these bolts.

2x	M8 X 20 mm Hex Bolt	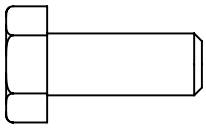	1x	Log Clamp Connecting Rod	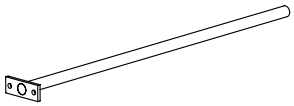
2x	M8 Lock Nut	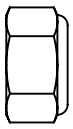	1x	Log Clamp Arm	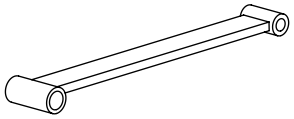
			1x	Log Clamp	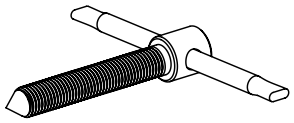
			2x	Long Log Support	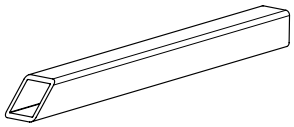
			2x	Short Log Support	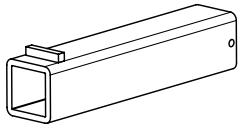

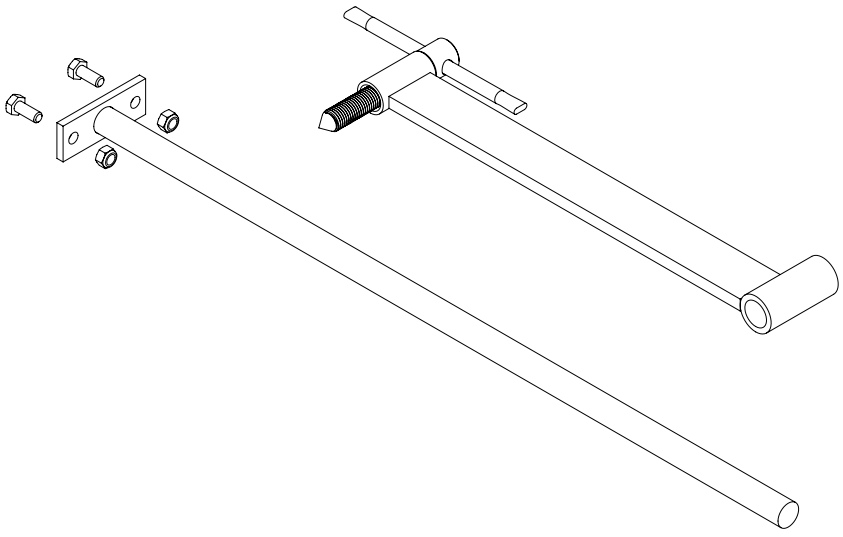

Attach the log dog assembly to the track as shown below using the two (2) bolts and nuts provided. Note that there are various locations along the track where the log dog can be bolted. Depending on how many track sections are being used, select a log clamp position that will secure the log firmly against the log supports.

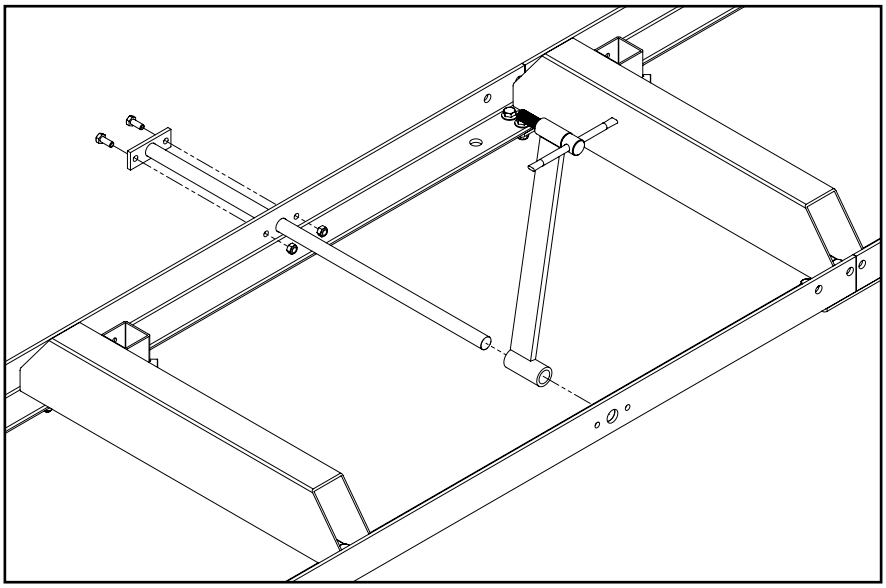

Insert log supports into track cross supports and secure with M10 T-bolts as shown in the picture below. The T-bolt threads should be ***coated with grease***. The sawmill includes two sets of log supports—a short set and a long set. The long set is ideal for large diameter logs while the shorter set is better suited for small logs and square cants.

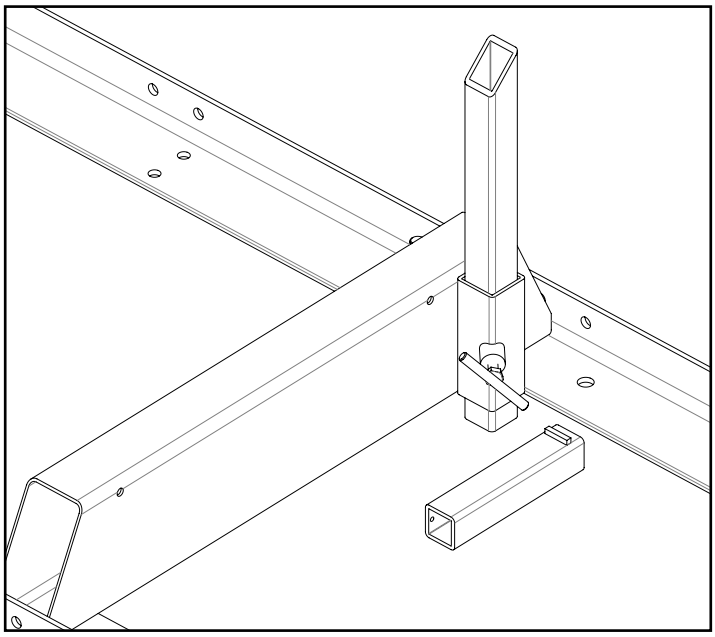

5. SAWMILL HEAD ASSEMBLY

The sawmill head assembly is built in multiple steps. Follow the steps in the sub-sections below using the parts tables at the top of each sub-section to gather the necessary components and hardware for each step.

FRONT POSTS

1x	M6 X 16 mm Hex Bolt	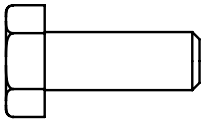	2x	Front Post	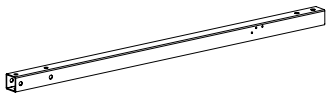

With the sawhead resting approximately 6 in [150 mm] above the ground, slide the two (2) front posts through the *top* of the post sleeves—do *not* assemble them from the bottom.

There are wedge-shaped caps on the bottom of each post to help aid the assembly of the posts through the nylon post sleeve bushings.

****Orient both posts so the threaded hole faces inward.****

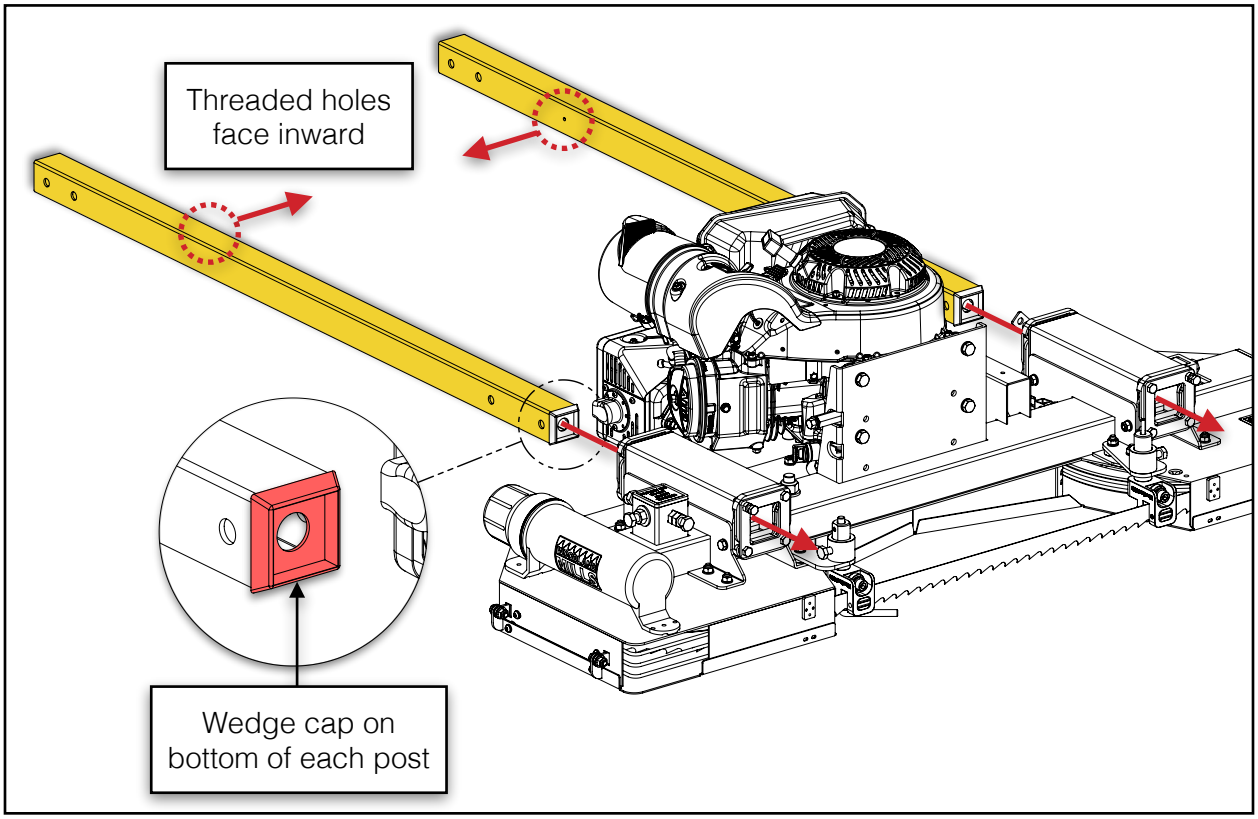

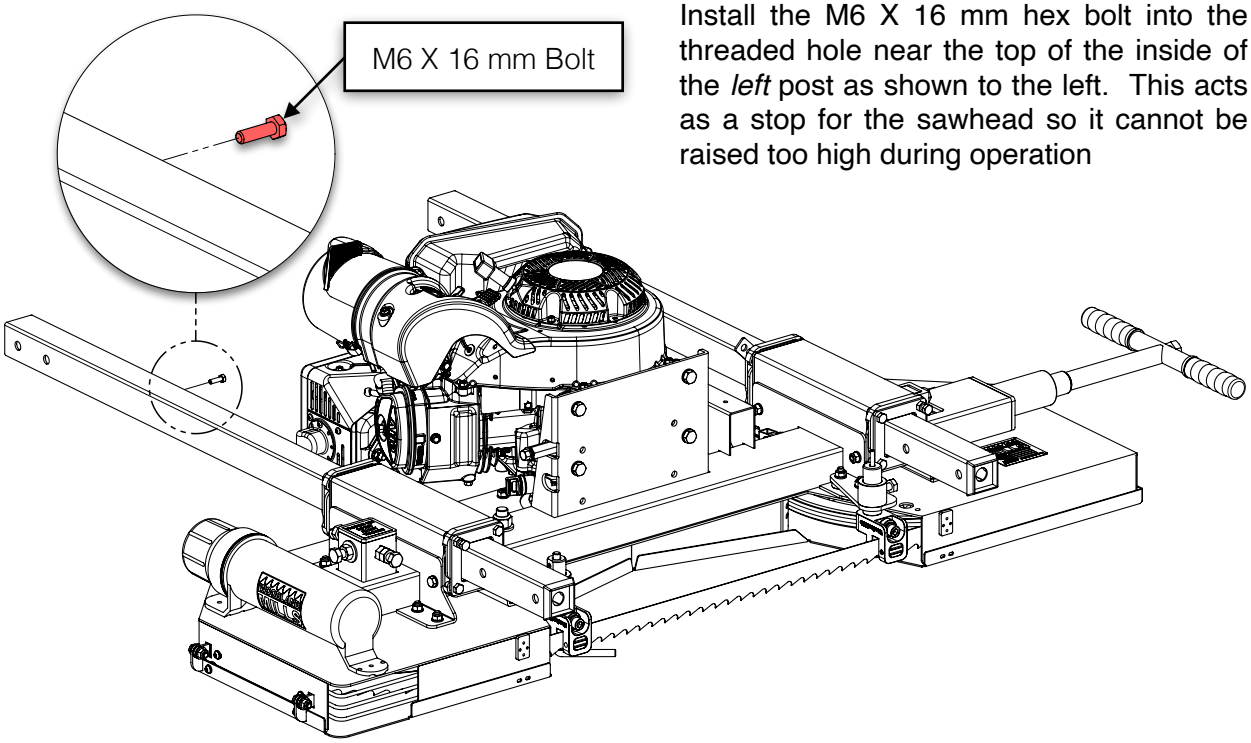

Install the M6 X 16 mm hex bolt into the threaded hole near the top of the inside of the *left* post as shown to the left. This acts as a stop for the sawhead so it cannot be raised too high during operation

Remove the wedge-shaped caps from the bottom of both posts. They are only required for front post assembly.

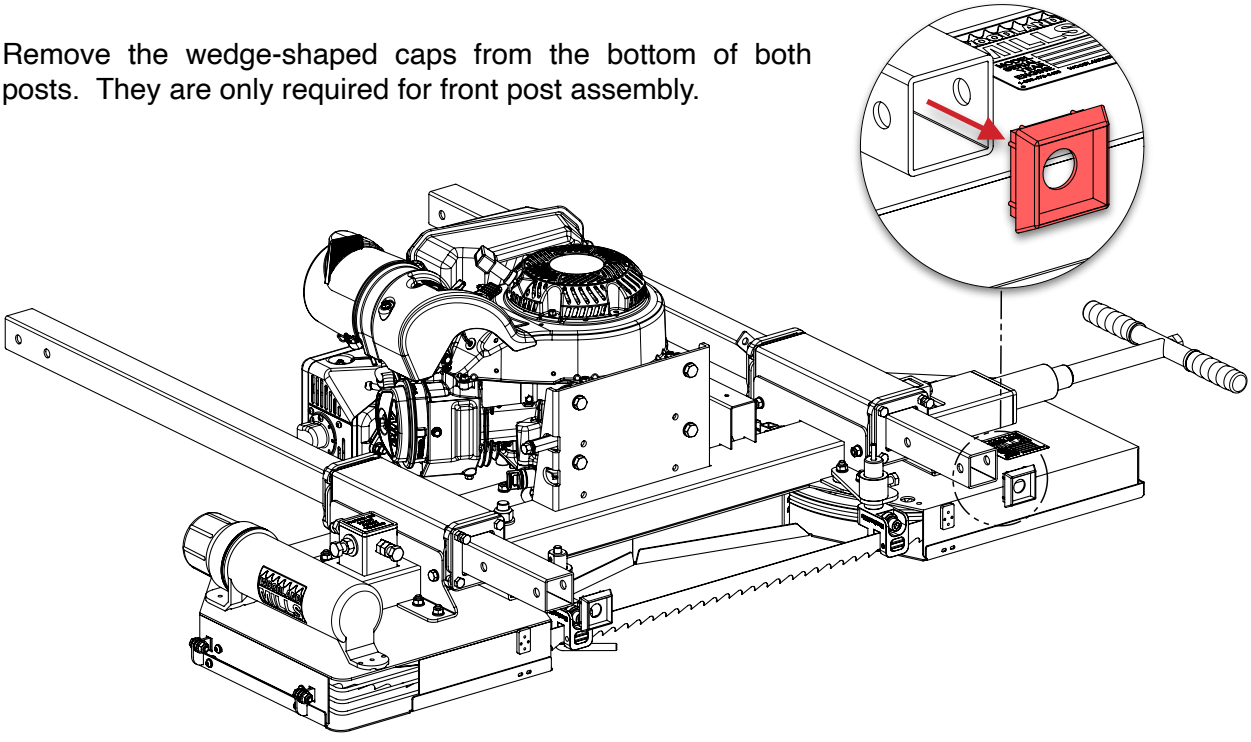

CARRIAGE LEGS

The carriage leg sub-assemblies come loosely assembled from the factory. Final tightening of these bolts will be done in a later step. See the ***CARRIAGE LEG, WHEEL, AND SWEEPER*** exploded view for a more detailed part breakdown.

4x	M12 X 80 mm Hex Bolt	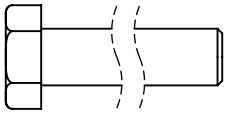	4x	M12 Flat Washer	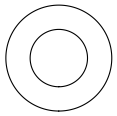
4x	M12 Lock Nut	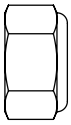	2x	Carriage Leg Sub-Assembly	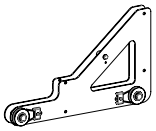

Attach the two (2) carriage leg sub-assemblies to the front posts with four (4) M12 X 80 mm bolts, flat washers, and lock nuts. Be sure the bolts point outward and the carriage wheels are positioned on the inside of the legs. Fully tighten these four (4) M12 bolts so that the plates are firmly attached to the posts. The posts should be pushed all the way up until the carriage leg plates contact the post sleeves.

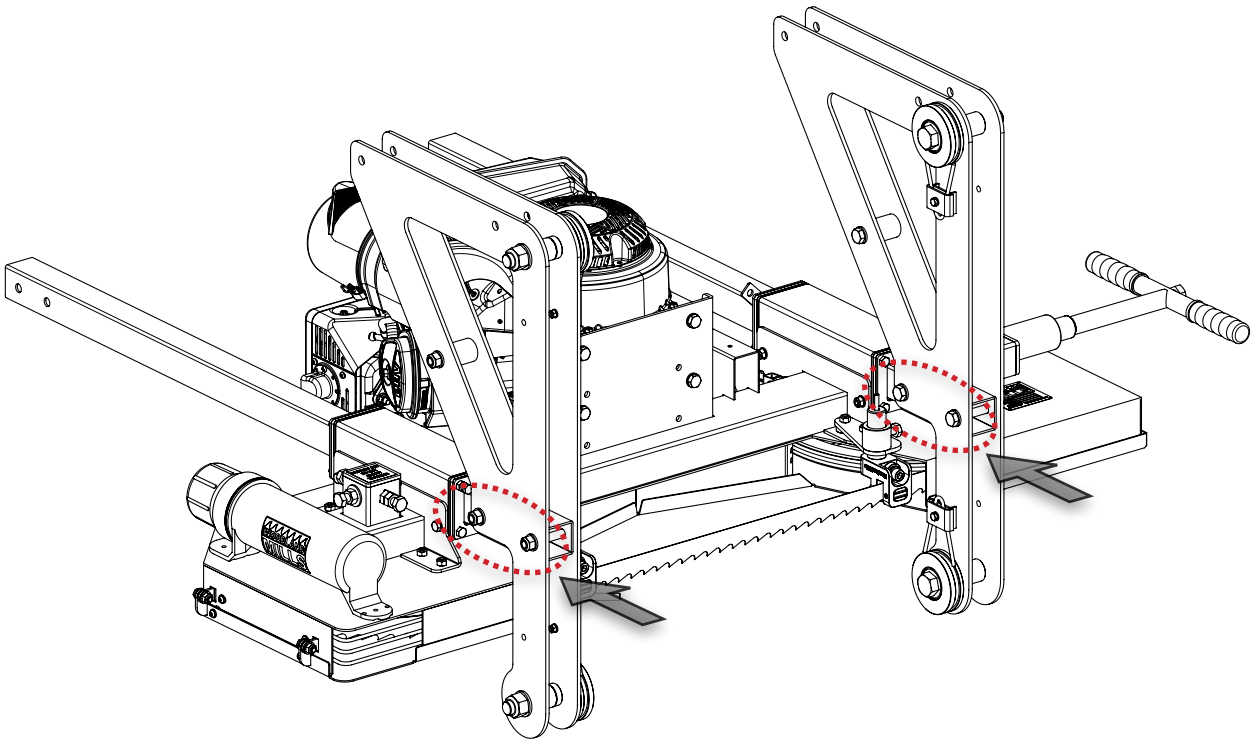

HEAD LOCK-DOWN PLATES

Woodland Mills sawmill trailer owners only

If a Woodland Mills sawmill trailer was purchased with this sawmill, the head lock-down plates can be loosely installed prior to standing the sawhead upright. The lock-down plates come with the sawmill trailers and are not included with the sawmill.

8x	Head Lock-Down Plate	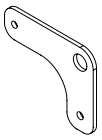

Disassemble each carriage wheel and discard the short spacers as they are no longer necessary. Assemble one (1) lock-down plate on each side of the long spacers—between the carriage legs—and then reassemble the carriage wheels. Do not fully tighten the carriage wheel bolts.

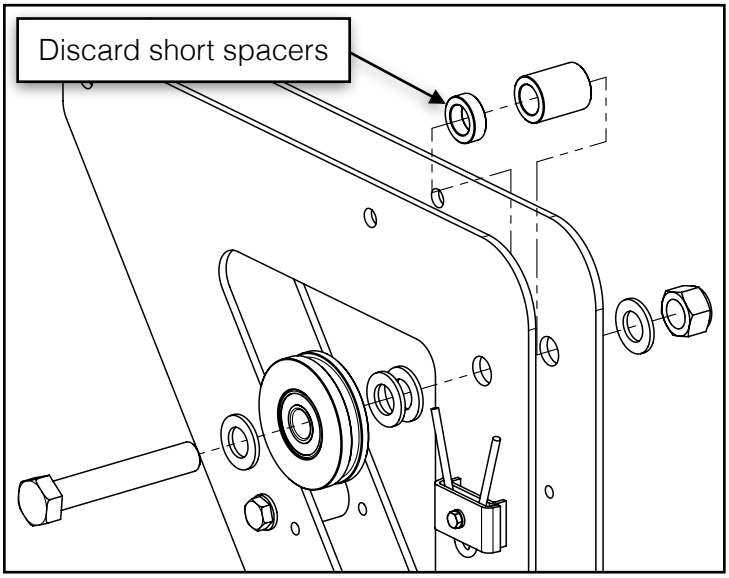

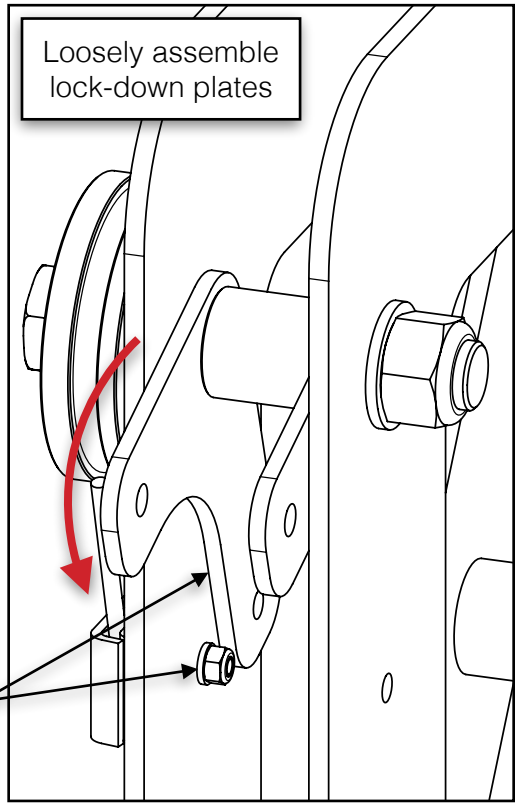

Ensure the longer lock-down plate leg will sit above the wheel sweeper nut when the sawhead is stood upright. This lets the lock-down plates swivel up inside the carriage legs avoiding possible damage until the sawhead is ready to be set on the track.

See section, ***HEAD LOCK-DOWN PLATES***, in the sawmill trailer Operator Manuals to complete the lock-down plate installation once the sawmill is on the trailer.

STANDING THE SAWHEAD UPRIGHT

With the help of another person, stand the sawhead upright by rotating it around the rounded profiles at the front of the carriage legs. Do not set the sawhead on the track until instructed to do so later in the assembly process.

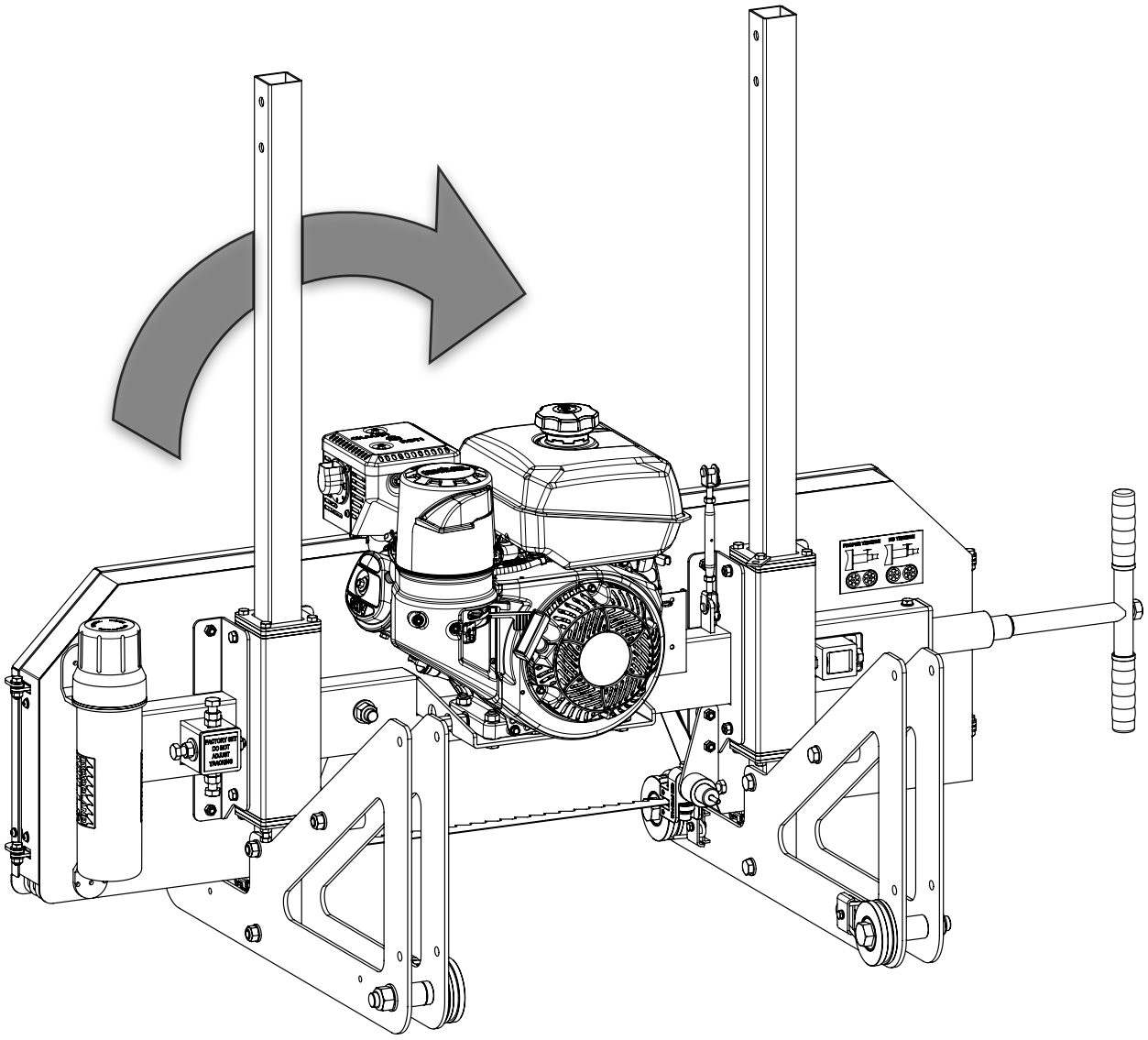

REAR POSTS

Using the hardware listed below, attach the rear posts between the carriage leg plates using only one (1) M12 X 80 mm bolt, flat washer, and lock nut per post.

2x	M12 X 80 mm Hex Bolt	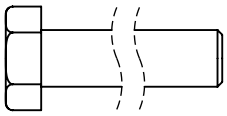	2x	Rear Post	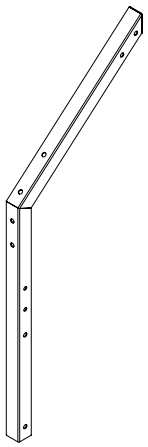
2x	M12 Lock Nut	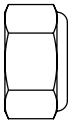			
2x	M12 Flat Washer	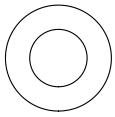			

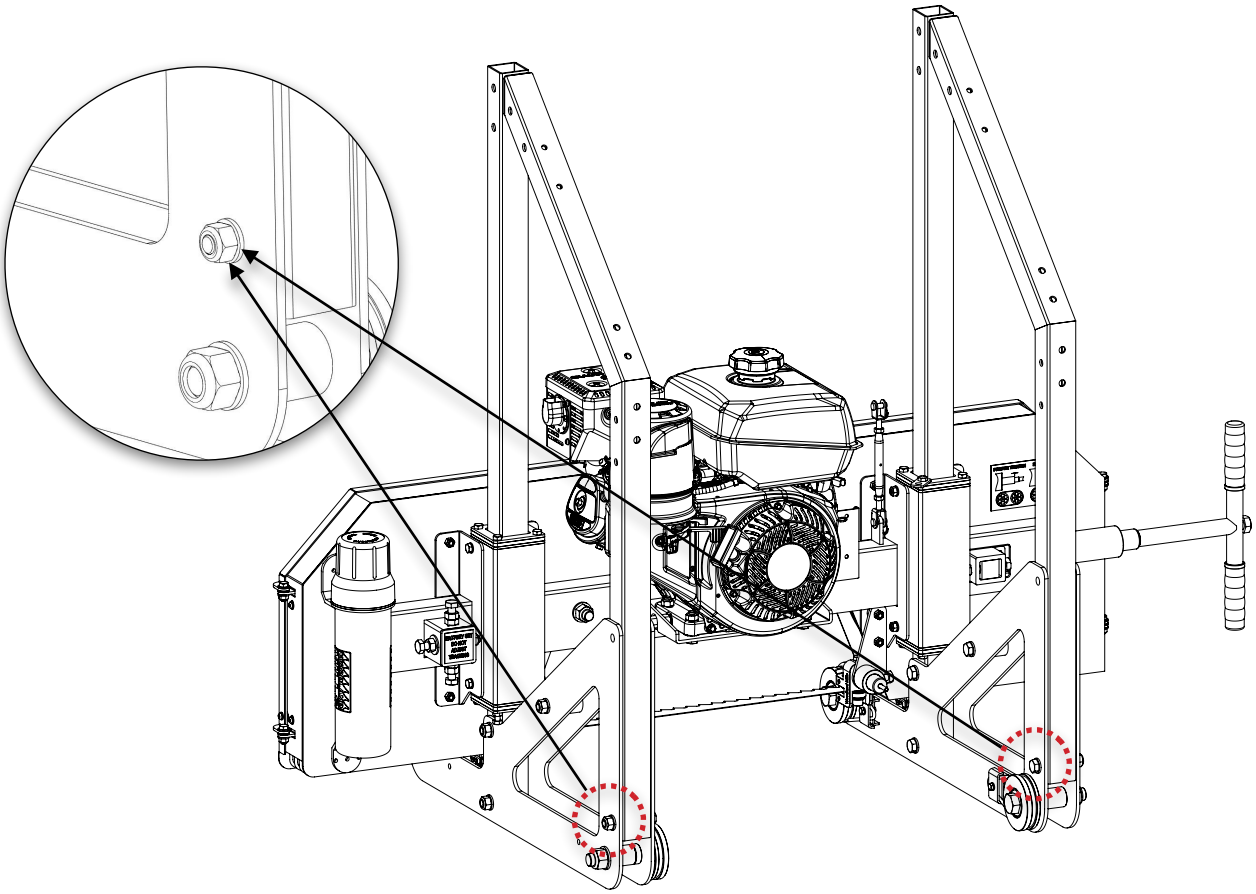

CROSS BEAM

With the hardware listed below, assemble the cross beam to the carriage posts.

1x	M12 X 90 mm Hex Bolt	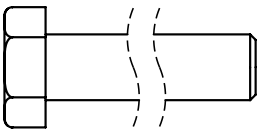	1x	Cross Beam and Pulley Assembly	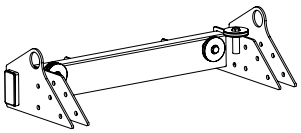
9x	M12 X 80 mm Hex Bolt	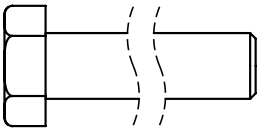	1x	Log Scale Indicator Bracket	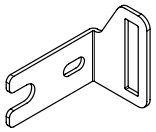
1x	M12 X 30 mm Hex Bolt	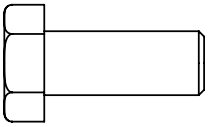	1x	Spacer [5 mm Lg]	
10x	M12 Lock Nut	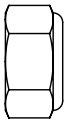	2x	End Cap	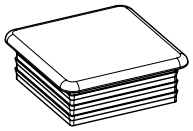
21x	M12 Flat Washer	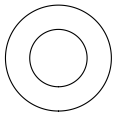			

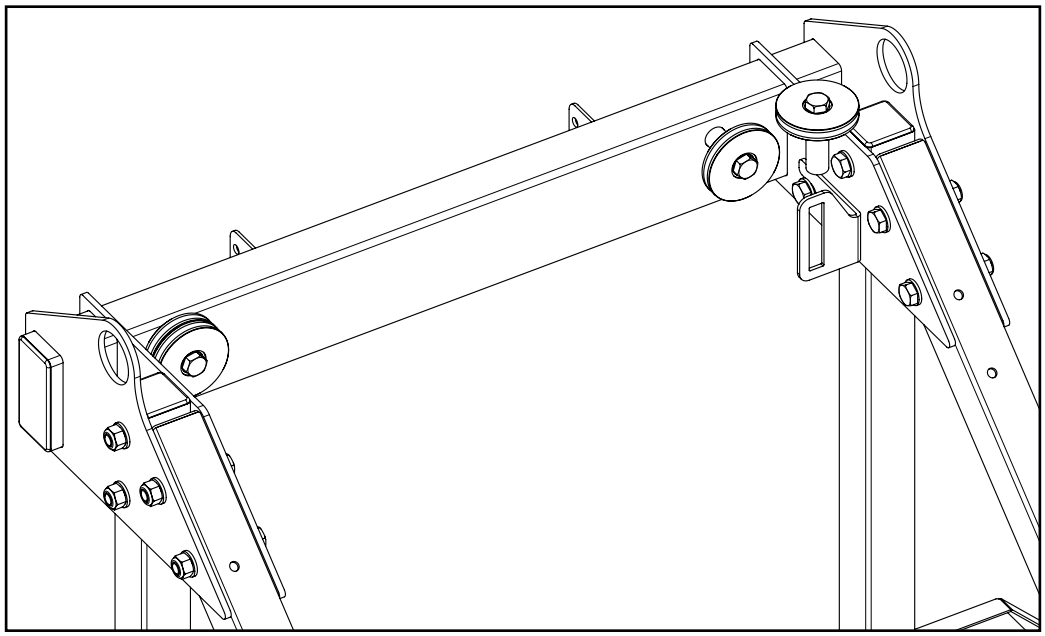

With the help of a second person, slide the cross beam over the carriage posts. Use seven (7) M12 X 80 mm bolts and one (1) M12 X 90 mm bolt (@ log scale indicator bracket) to fasten it in place. Use an M12 flat washer under every bolt head and lock nut.

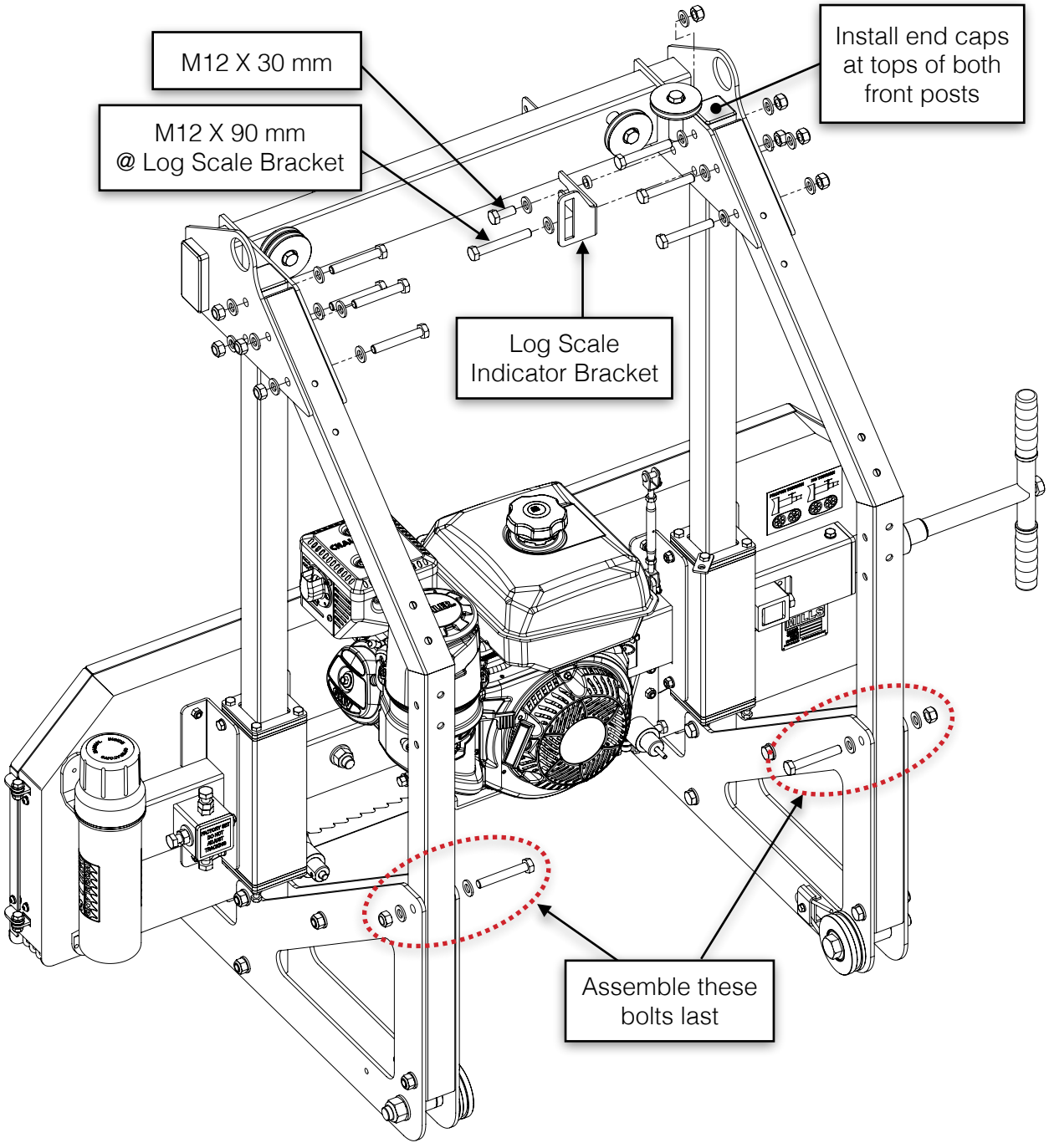

Finally, install two (2) M12 X 80 mm bolts at the top of each carriage leg. Do *not* fully tighten these bolts at this time.

LIFT MECHANISM & LIFT CABLE

Assemble the winch assembly to the right-rear post using the hardware listed below. The wire rope lift cable, crank arm, and index plate come pre-assembled to the winch.

2x	M8 X 70 mm Hex Bolt	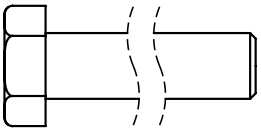	1x	Winch and Crank Arm Assembly	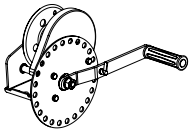
4x	M8 X 30 mm Fender Washer	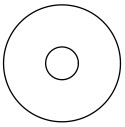	1x	Lift Cable	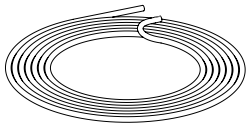
2x	M8 Lock Nut	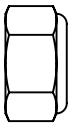			

First, assemble the winch to the two (2) holes in the right-rear post near the cross beam. Use two (2) M8 X 70 mm bolts, four (4) fender washers, and two (2) lock nuts. Fully tighten the hardware.

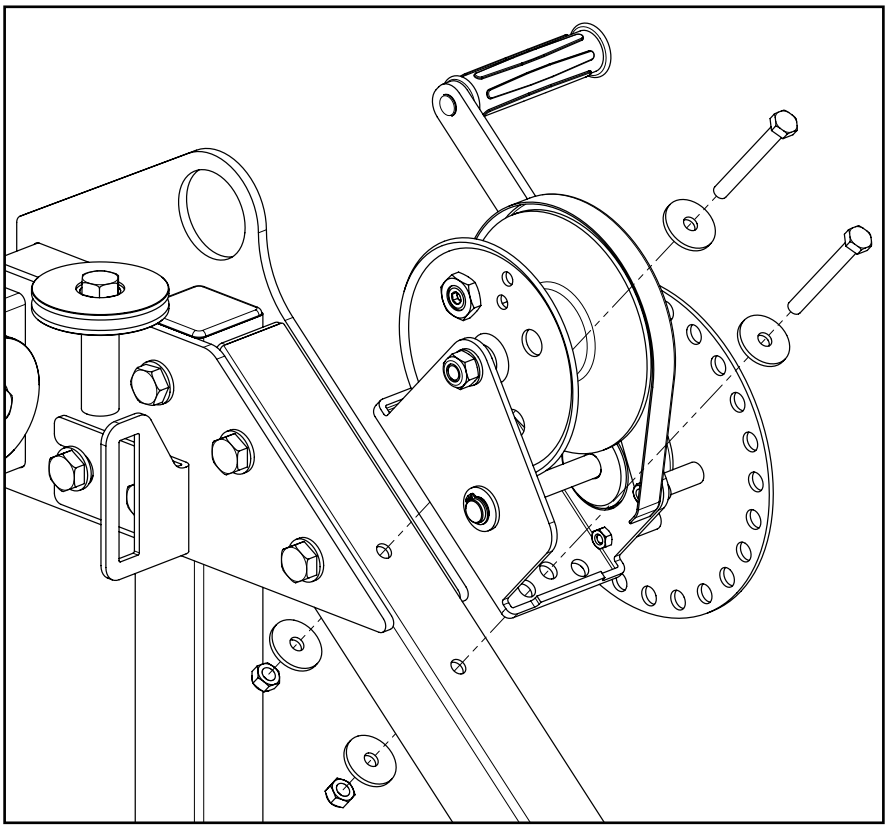

Route the lift cable as shown in the steps below. [Engine removed from some views for clarity.]

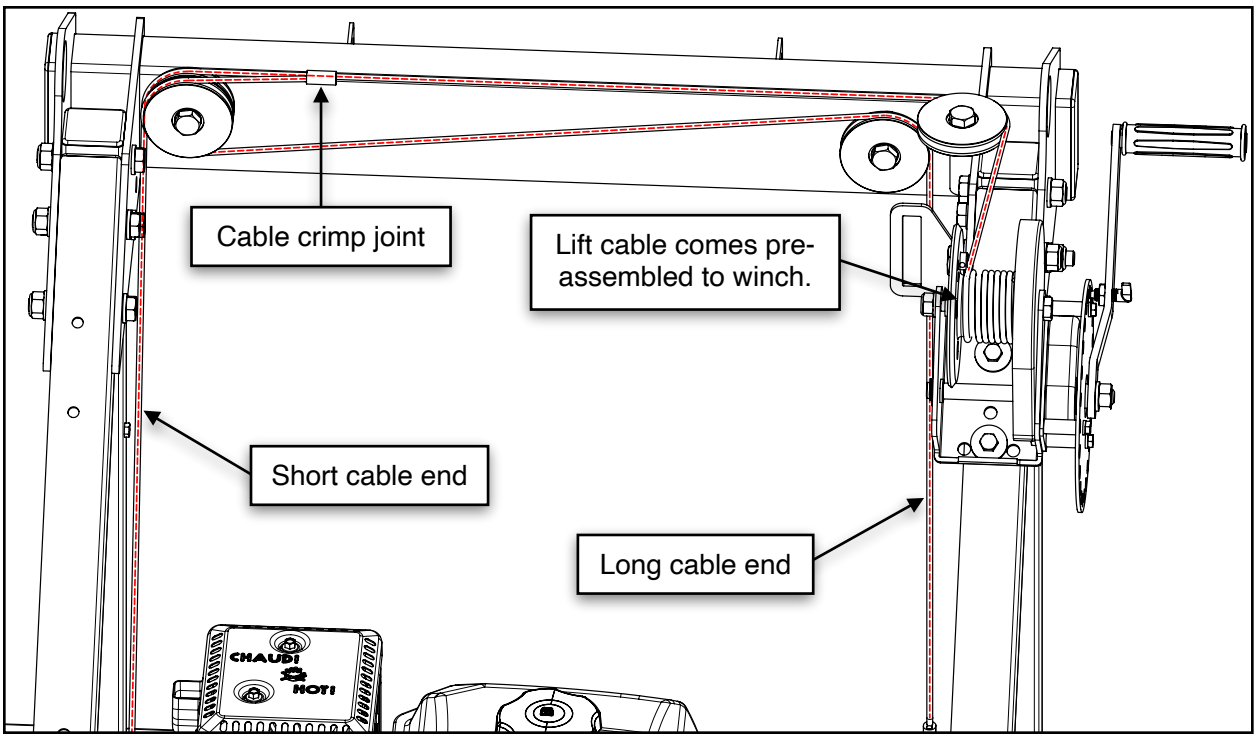

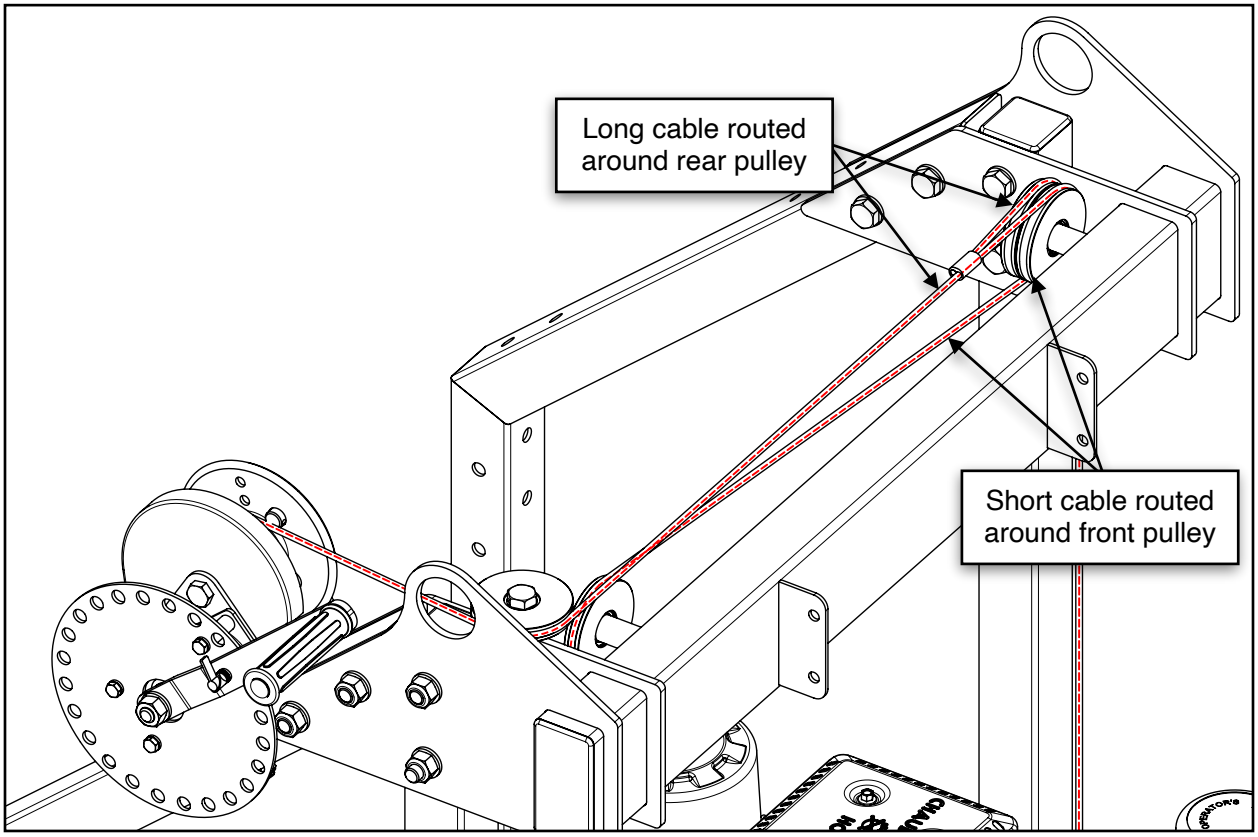

Connect the shorter end of the lift cable to the bolt in front of the left-front post.

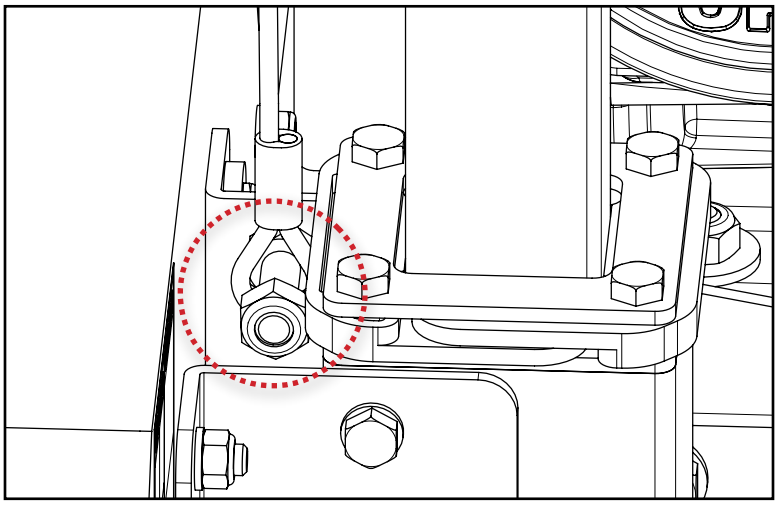

Connect the longer end of the lift cable to the turnbuckle next to the front-right post by removing the upper clevis pin and locking ring. The turnbuckle will be adjusted later when the sawhead is levelled.

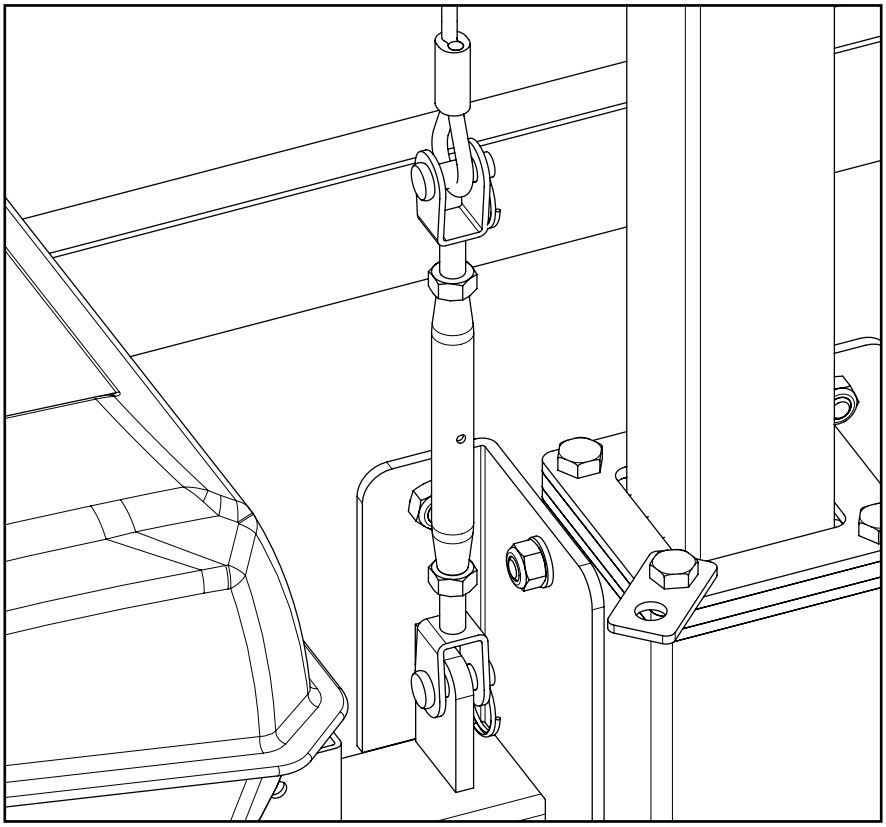

LUBRICATION TANK & TUBING

With the hardware listed below, assemble the lubrication tank to the front of the cross beam and route the plastic tubing.

4x	M8 X 16 mm Hex Bolt	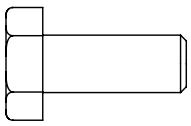	1x	Drip Nozzle	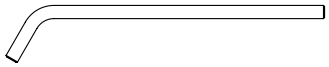
4x	M8 Lock Nut	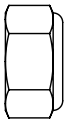	2x	Lubricant Tubing	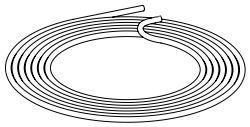
1x	Lubrication Tank Assembly	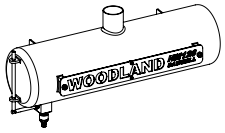			

Assemble the lubrication tank assembly to the cross beam with four (4) M8 X 16 mm bolts and lock nuts. Ensure the bolts point inward.

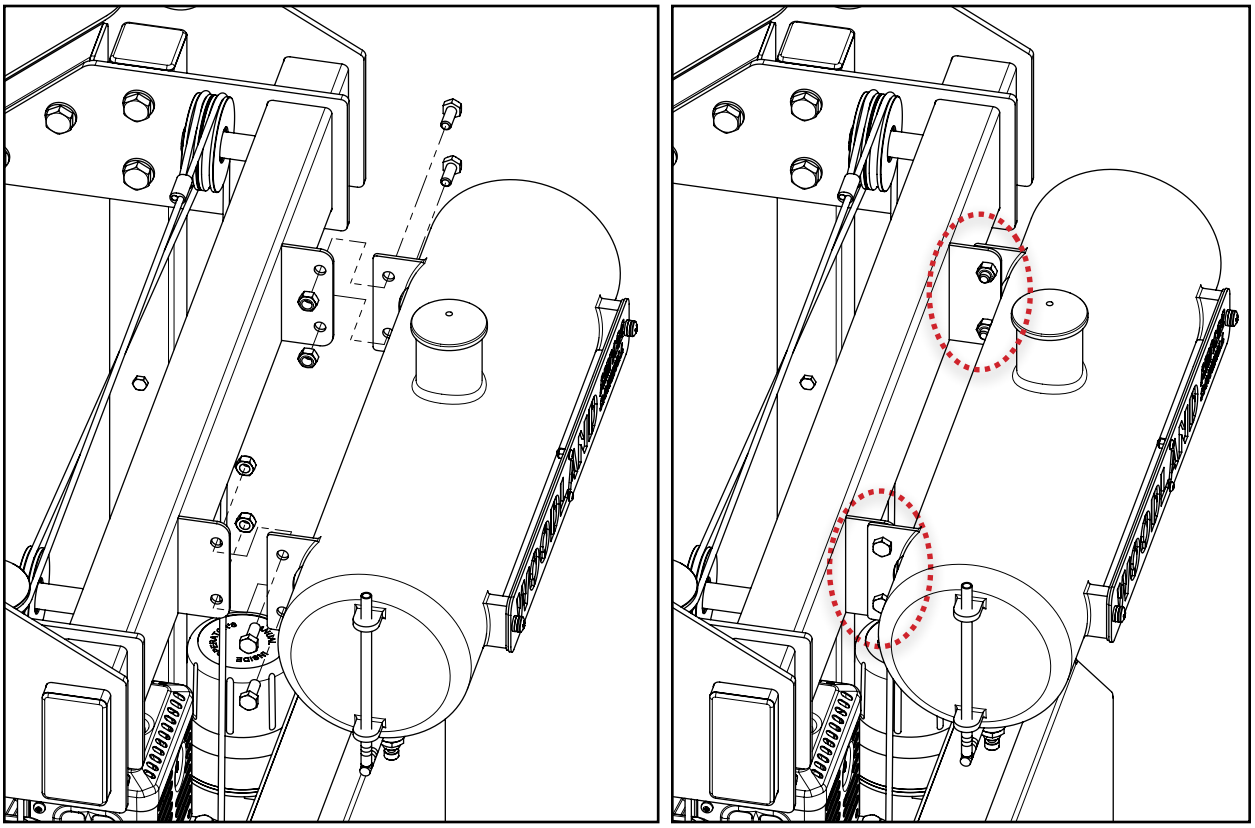

The copper drip nozzle comes assembled to one of the pre-cut lengths of tubing. Remove the the copper drip nozzle from the tubing and assemble it into the *follower-side* guide block holder as shown below. Other sawmill components have been removed for clarity.

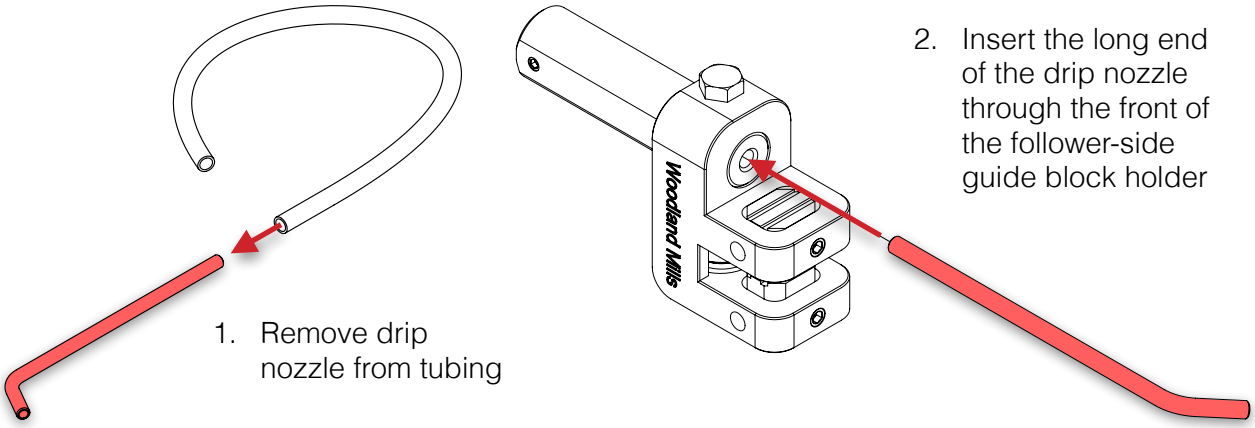

1. Remove drip nozzle from tubing

2. Insert the long end of the drip nozzle through the front of the follower-side guide block holder

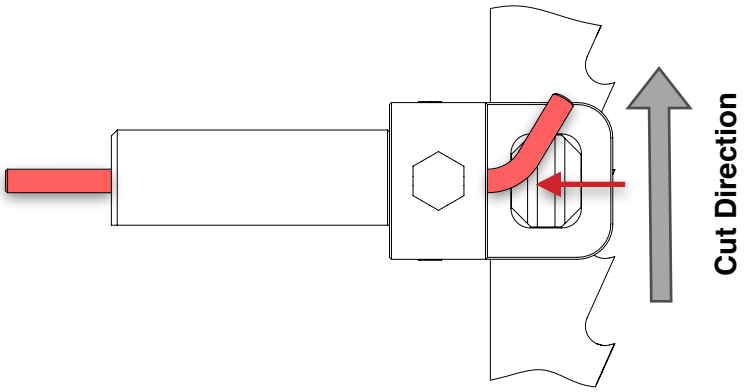

3. Ensure the drip nozzle is pushed far enough through the guide block holder shaft so that the water will drip onto the blade.

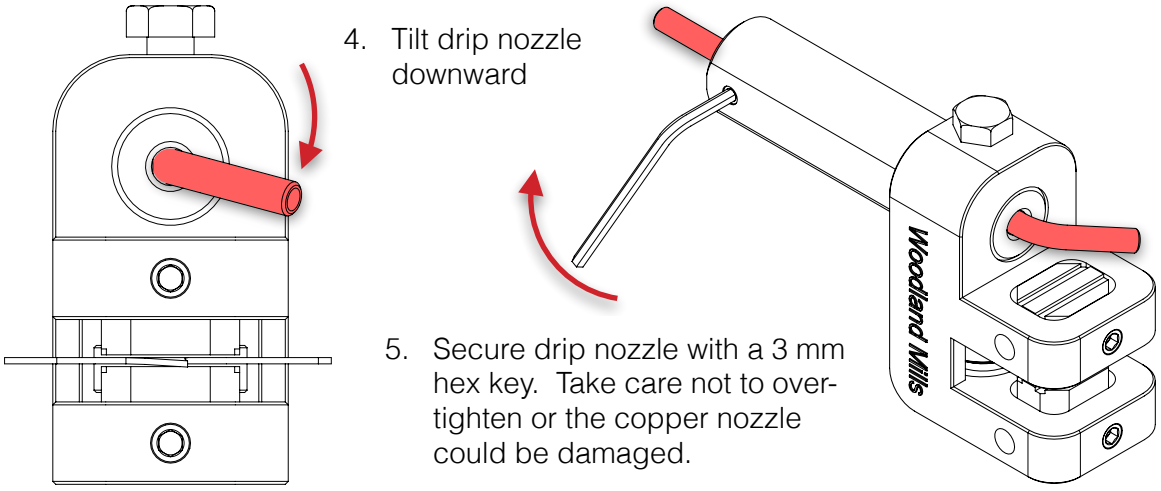

4. Tilt drip nozzle downward

5. Secure drip nozzle with a 3 mm hex key. Take care not to over-tighten or the copper nozzle could be damaged.

Route one length of tubing from the blue ring fitting on the tank to the vertical barbed fitting on the auto-lube valve.

Route the other length of tubing from the horizontal barbed fitting on the auto-lube valve, down to the copper drip nozzle on the guide block holder shaft.

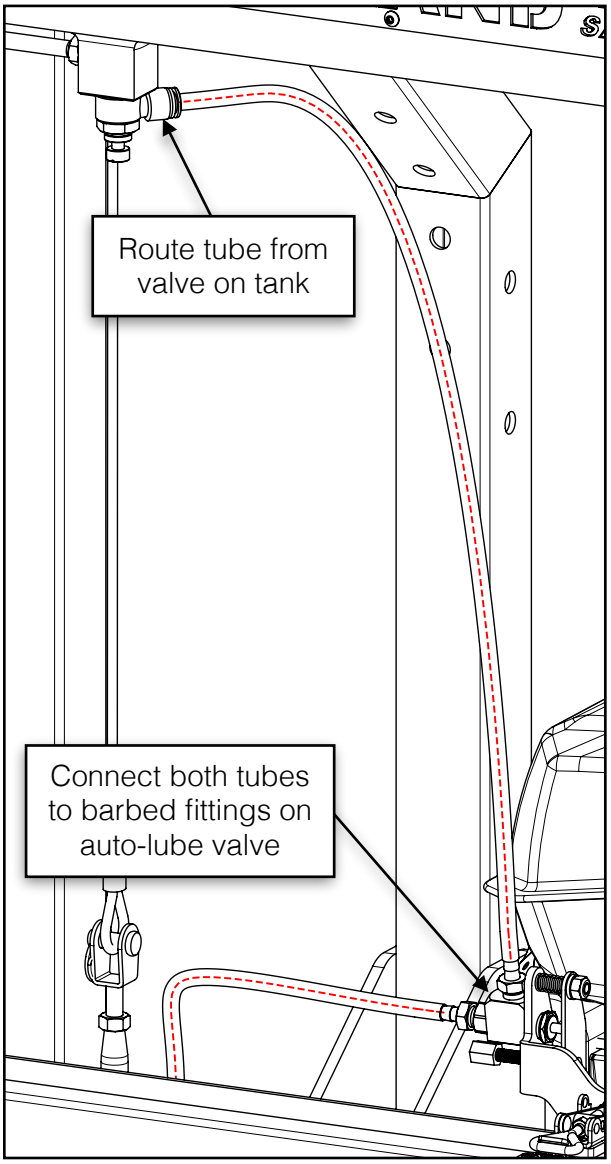

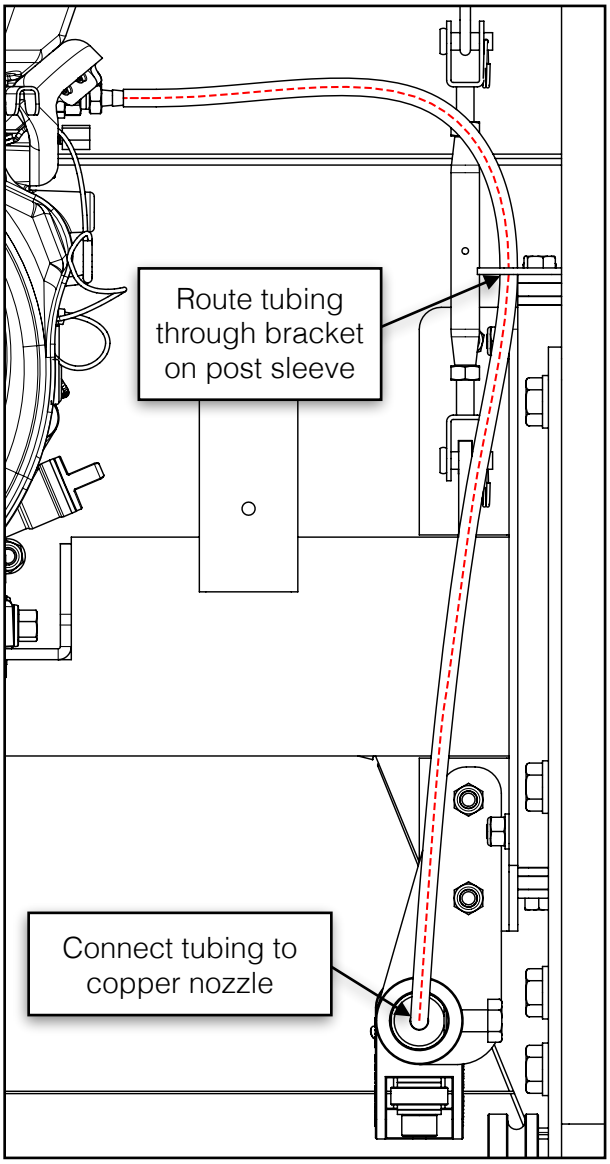

LOG SCALE

With the hardware listed below, assemble the log scale components.

2x	M6 X 15 mm Hex Bolt	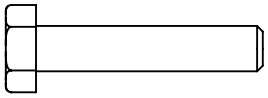	1x	Log Scale Bracket	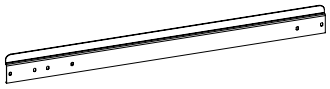
2x	M6 Lock Nut		1x	Magnetic Scale [White]	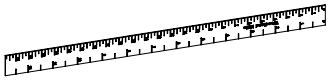
2x	M6 Flat Washer	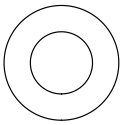	1x	Magnetic Scale [Yellow]	
			1x	Log Scale Guide	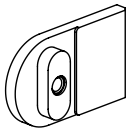
			1x	Lock Scale Locking Plate	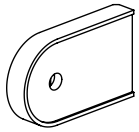
			1x	Log Scale Indicator Arrow	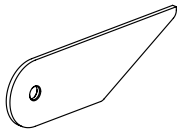
			1x	M8 X 25 mm Knob	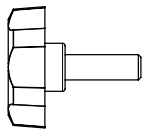

Bolt the log scale bracket—through the end with only two (2) slots—to the back beam with two (2) M6 X 15 mm bolts, flat washers, and lock nuts as shown below.

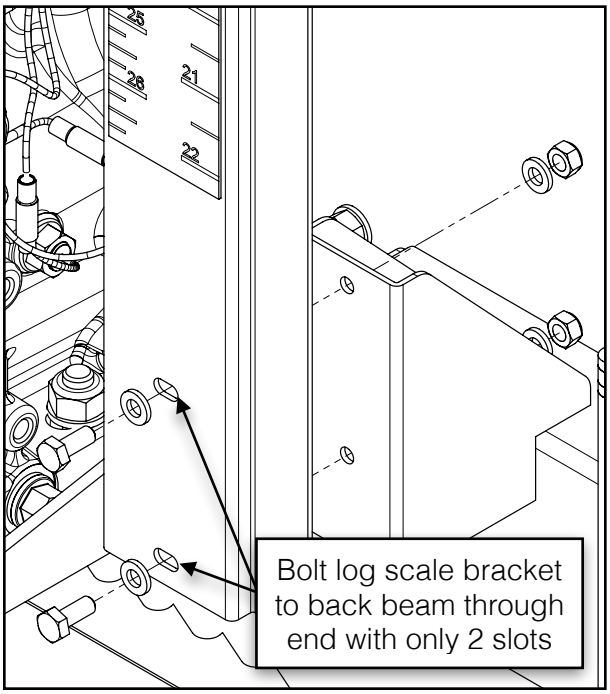

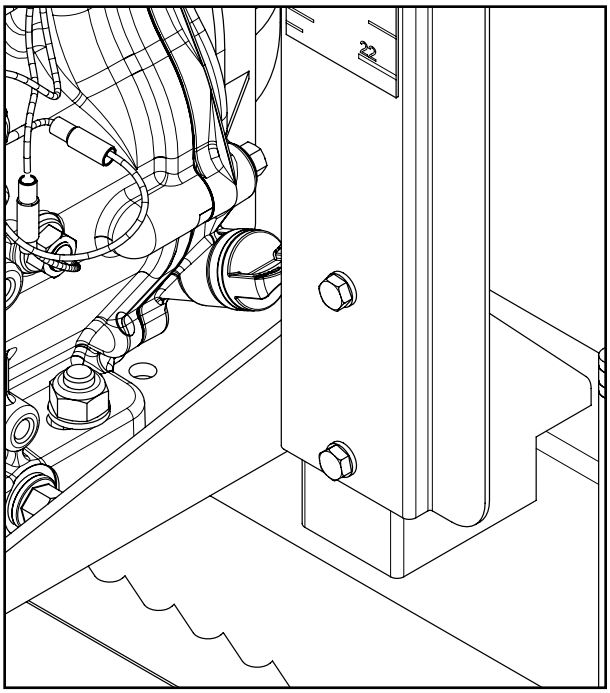

Note: the sawmill comes with two (2) different magnetic scales: one yellow, one white. Each with two different graduations down the left and right sides

Yellow Scale

The left side is an inch scale, with the large graduations spaced at 1 in. The right side is "*four quarter*" (4/4) which mills the lumber ⅛ in oversize to allow for finish planing on each side after drying.

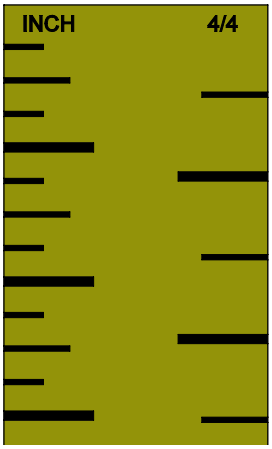

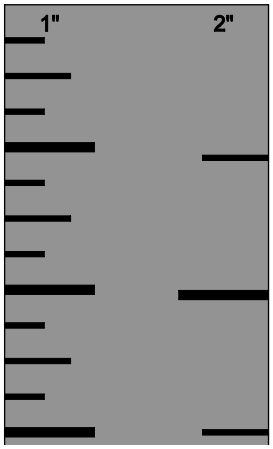

White Scale

The left side is an inch scale, with the large graduations spaced at 1 in + blade kerf. The right side is also an inch scale, except the large graduations are spaced at 2 in + blade kerf.

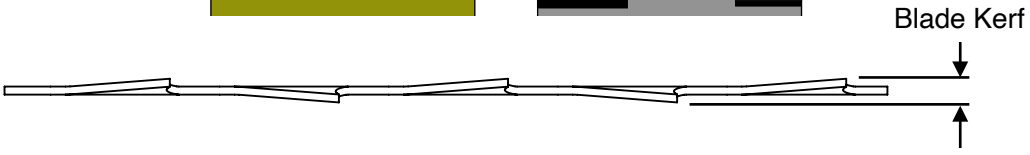

The graduations on the white magnetic scale make allowances for the blade kerf. On the yellow magnetic scale the kerf is not accounted for in the measurements.

Assemble the guide, locking plate, and indicator arrow to the log scale indicator bracket using the M8 threaded knob. Adjust the position of the indicator bracket forwards or backwards if the guide and locking plate bind on the log scale bracket as the sawhead is raised and lowered.

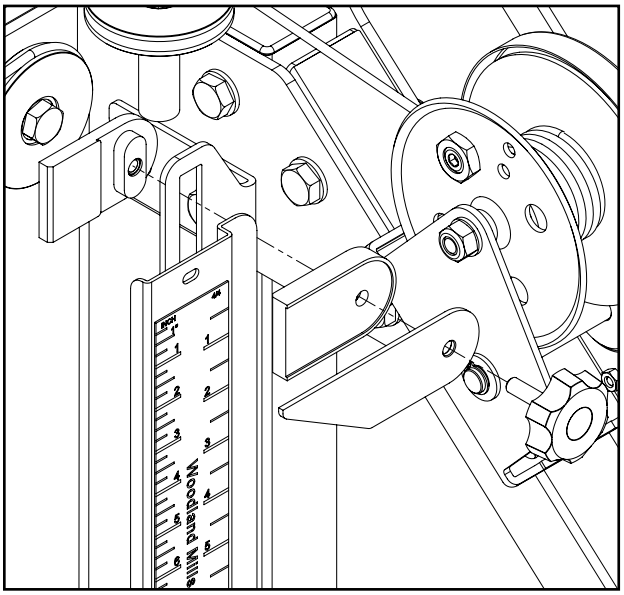

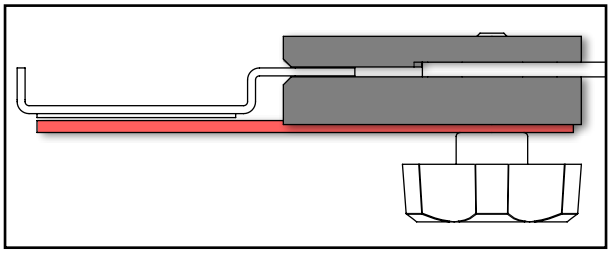

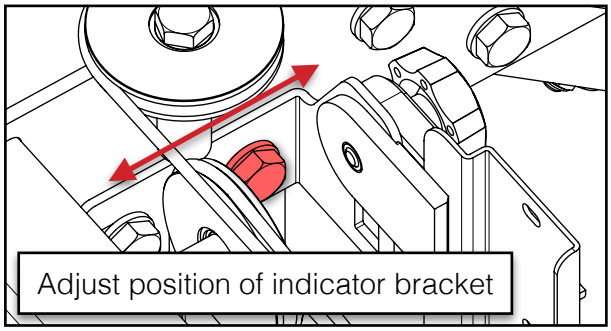

Store the other magnetic scale on the front side of the log scale bracket when not in use.

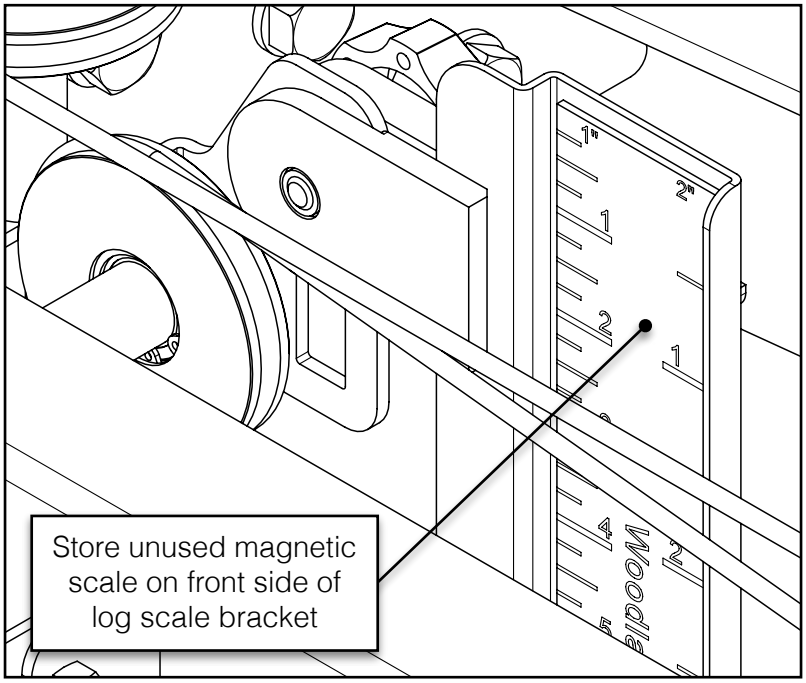

DASHBOARD

With the hardware listed below, assemble the dashboard to the rear carriage posts.

4x	M10 X 80 mm Hex Bolt	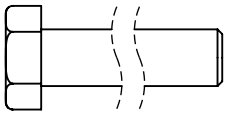	16x	M10 Flat Washer	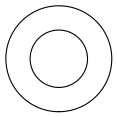
4x	M10 X 75 mm Hex Bolt	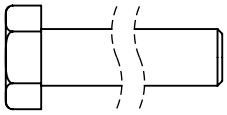	1x	Dashboard	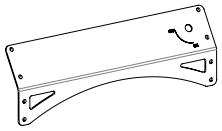
8x	M10 Lock Nut	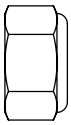			

Assemble the dashboard to the rear carriage posts with four (4) M10 X 80 mm bolts through the upper holes and four (4) M10 X 75 mm bolts through the lower holes as shown. Use an M10 flat washer under every bolt head and lock nut. Do *not* fully tighten these bolts at this time.

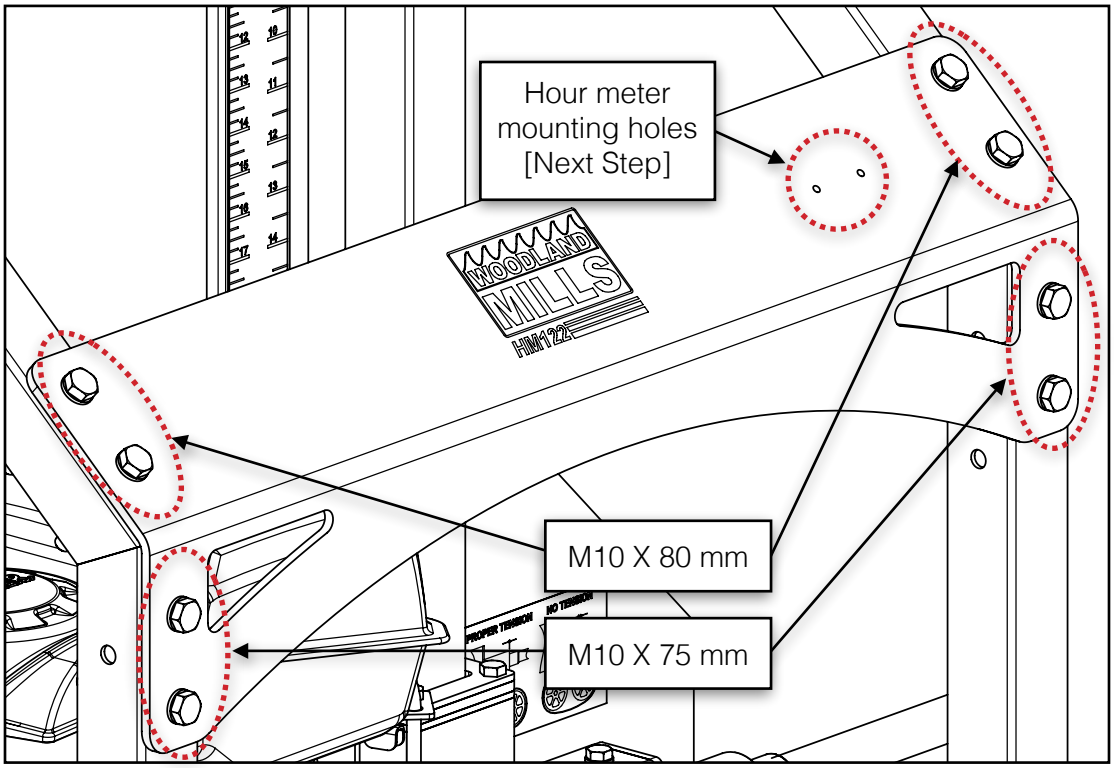

HOUR METER

With the hardware listed below, assemble the hour meter to the dashboard.

2x	M4 X 30 mm Pan Head Screw	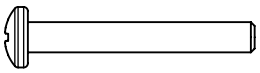	4x	M4 Flat Washer	
2x	M4 Lock Nut		1x	Hour Meter	

Assemble the hour meter to the right-side of the dashboard through the two (2) small holes. Use two (2) M4 X 30 mm pan head screws, four (4) flat washers (2 per screw), and two (2) lock nuts. Once the entire sawmill has been assembled, snip the wire loop at the top of the meter with either a razor or sharp knife. This will activate the meter to start measuring the vibration of the machine, recording the hours of use on the engine.

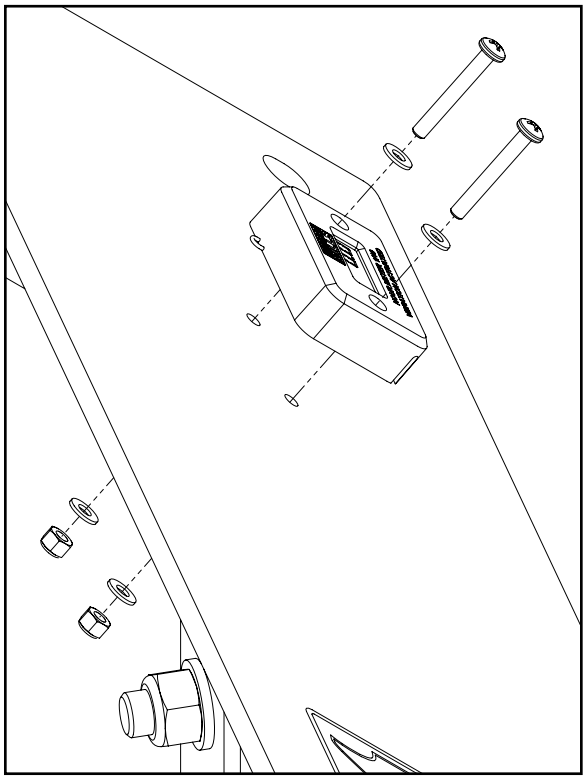



Cut wire loop on hour meter after sawmill is assembled

PUSH HANDLE

With the hardware listed below, assemble the push handle to the right rear carriage leg.

2x	M10 X 70 mm Flanged Hex Bolt	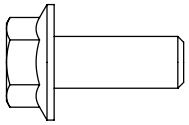	1x	Push Handle	
2x	M10 Flanged Lock Nut	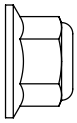			

The push handle is installed in an upward position when the sawmill is ground-mounted (**below-left**). Or it can be rotated 180° if the sawmill is high above the ground on a sawmill trailer or on a purpose-built stand (**below-right**).

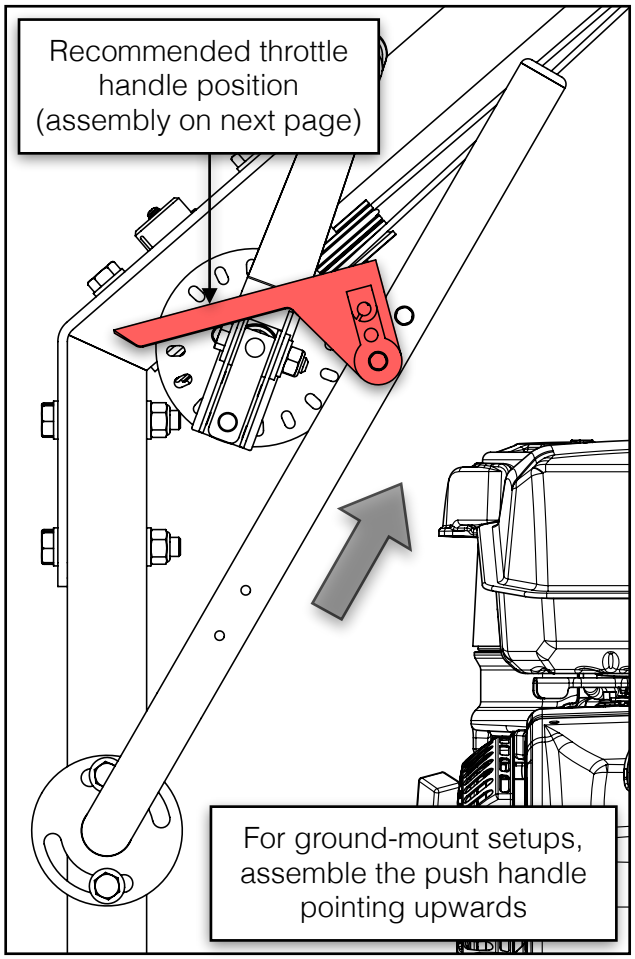

Ground-Mount Push Handle and Throttle Handle Recommended Position

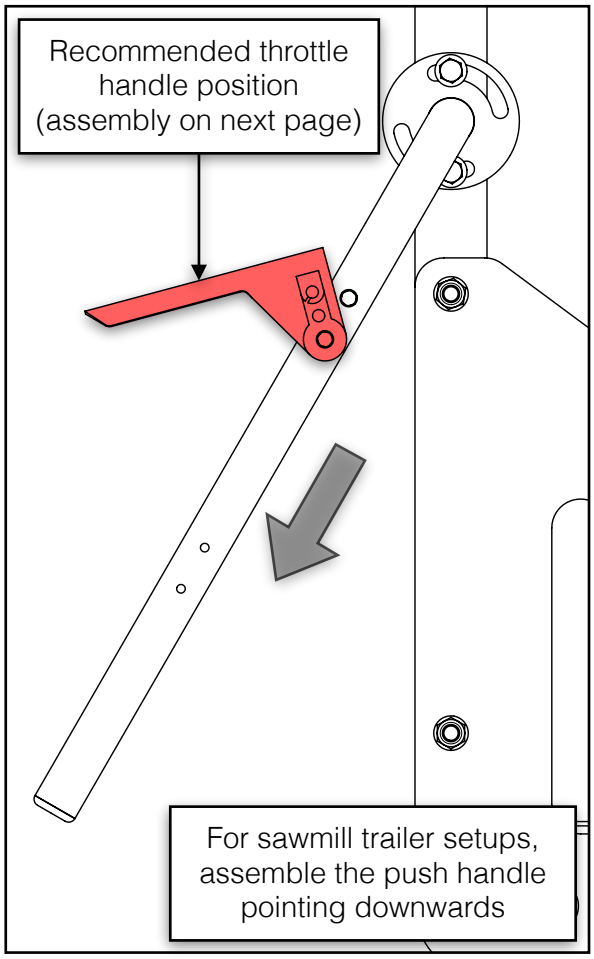

Sawmill Trailer Push Handle and Throttle Handle Recommended Position

When a desired push handle orientation has been decided upon, attach the push handle to the side of the post using two (2) M10 X 70 mm bolts and lock nuts as shown below. Fully tighten these bolts.

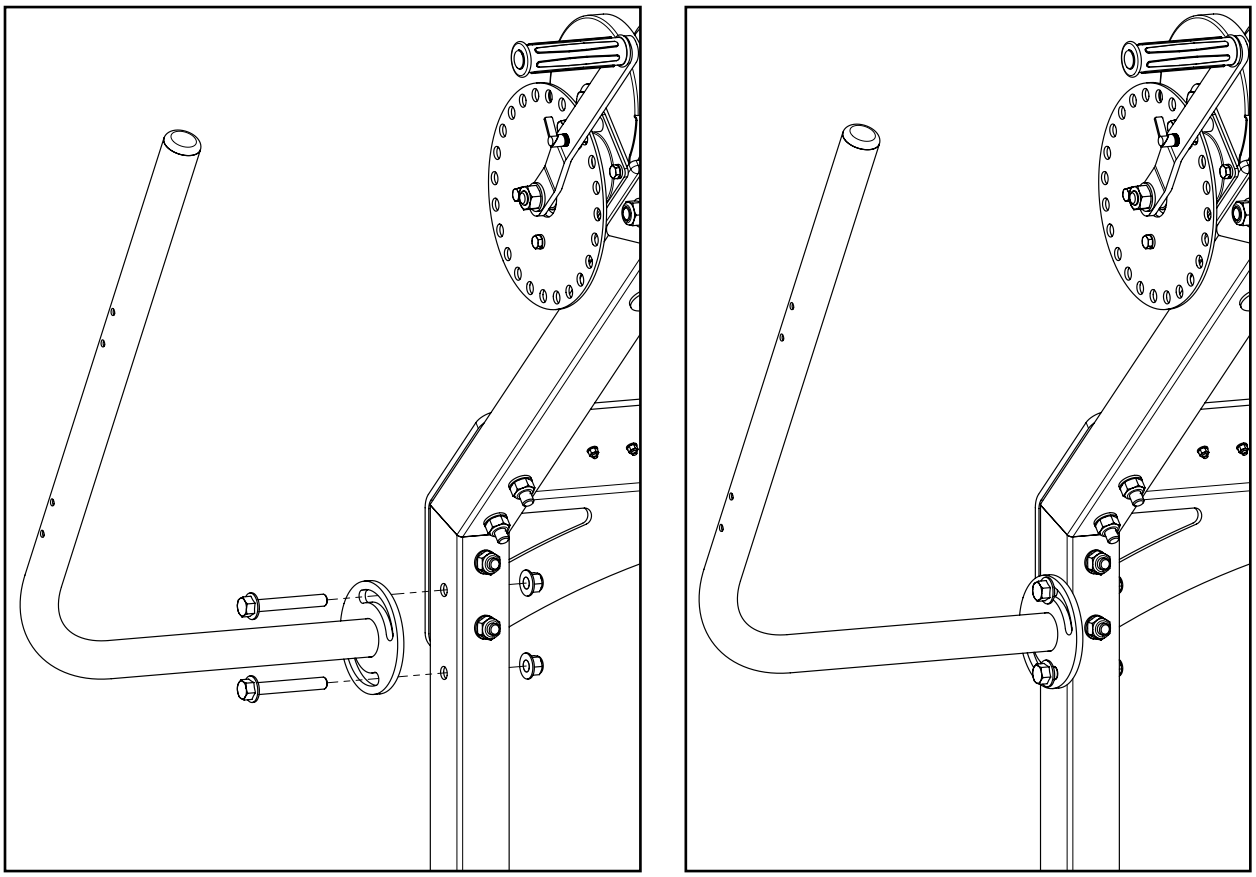

The push handle can be adjusted/rotated forwards or backwards to suit the ergonomics of the operator in either ground-mount or sawmill trailer configurations.

THROTTLE HANDLE AND CABLE

Use the hardware listed below to assemble the throttle handle to the push handle and route the throttle cable to the engine.

1x	M4 X 12 mm Phillips Pan Head Screw	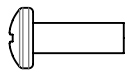	1x	Throttle Handle Assembly	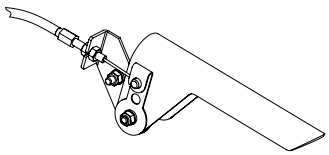
1x	Throttle Cable Barrel Clamp	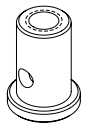			

The throttle handle comes loosely pre-assembled. The hardware needs to be unthreaded from the throttle handle prior to assembly. There are two (2) M6 hex bolts, two (2) lock nuts, and six (6) flat washers.

Assemble the throttle handle to the uppermost pair of holes in the push handle.

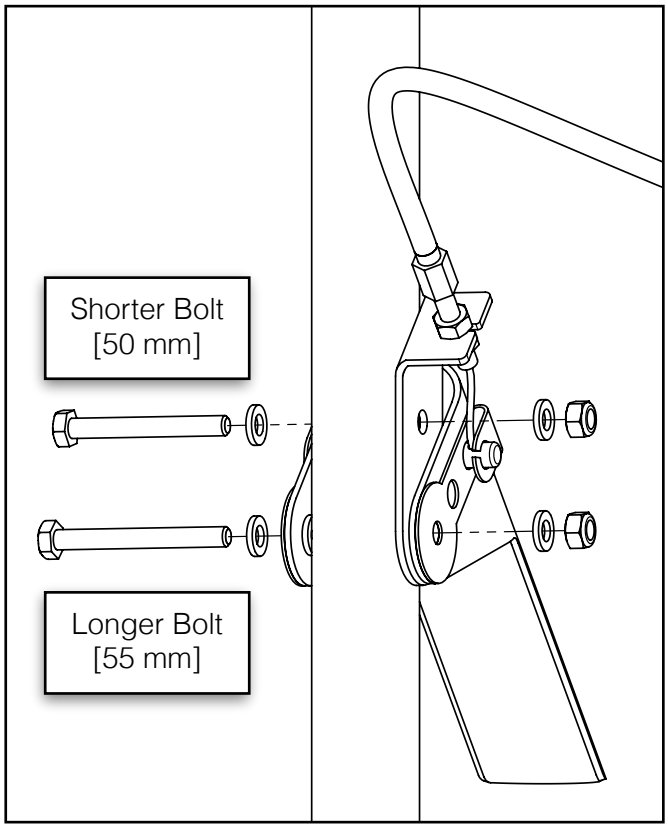

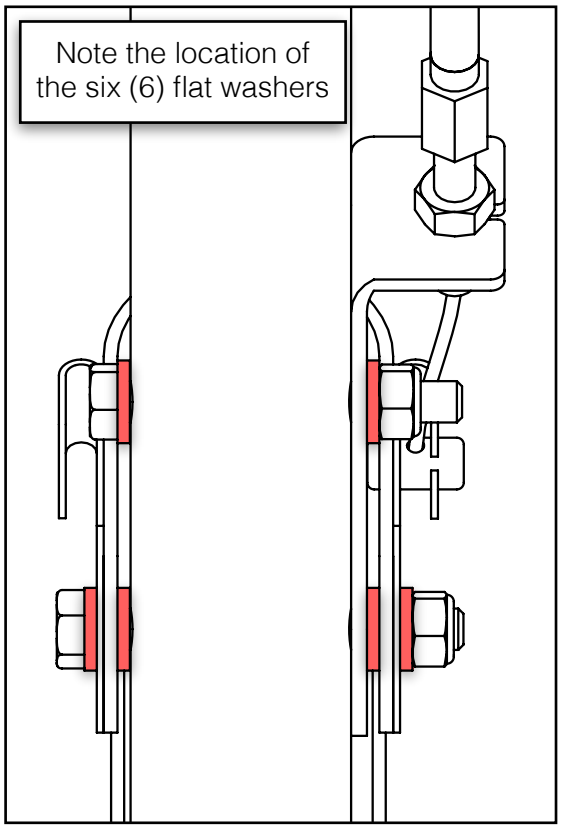

With the throttle lever in the idle position (fully open), route the cable around the front-right carriage post. Pass the cable through the thimble in the auto-lube bracket and pull the unsheathed portion of the cable through the hole in the actuator tab, then to the engine.

Next, route the unsheathed end of the cable through the hole in the barrel clamp, pull it tight while ensuring the throttle handle is still fully open, and then tighten the M4 Phillips pan head screw to secure it in place. This will take the slack out of the cable.

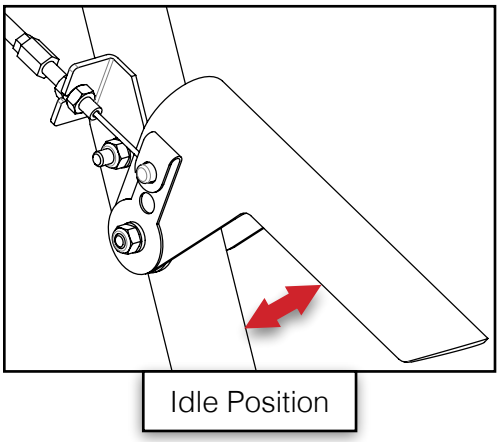

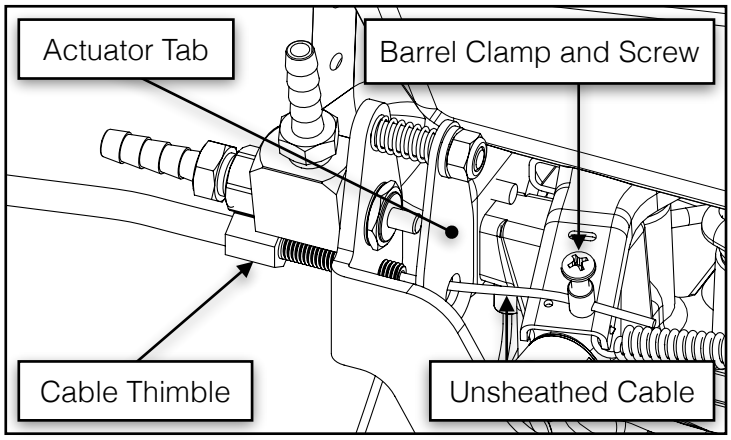

The assembled throttle handle and routed cable should now match the image below.

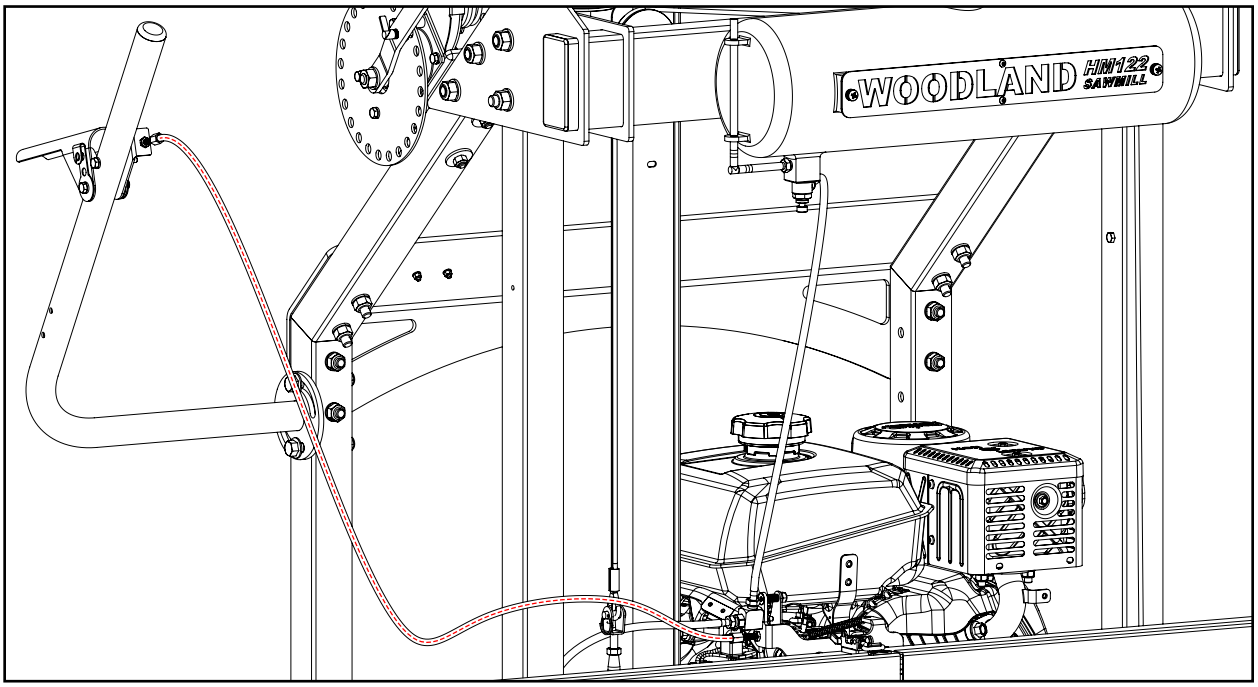

BAND WHEEL DOOR LATCHES

Using the hardware listed below, assemble the two (2) bottom band wheel door latches.

8x	M4 X 10 mm Phillips Flat Head Screw		2x	Latch	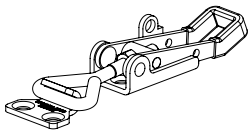
4x	M4 Lock Nut				

Use two (2) M4 X 10 mm flat head screws per latch. Assemble the latches to the pre-installed spacers on the bottom of the band wheel housing. On each band wheel door, install the hook-shaped catch using two (2) M4 X 10 mm flat head screws with lock nuts.

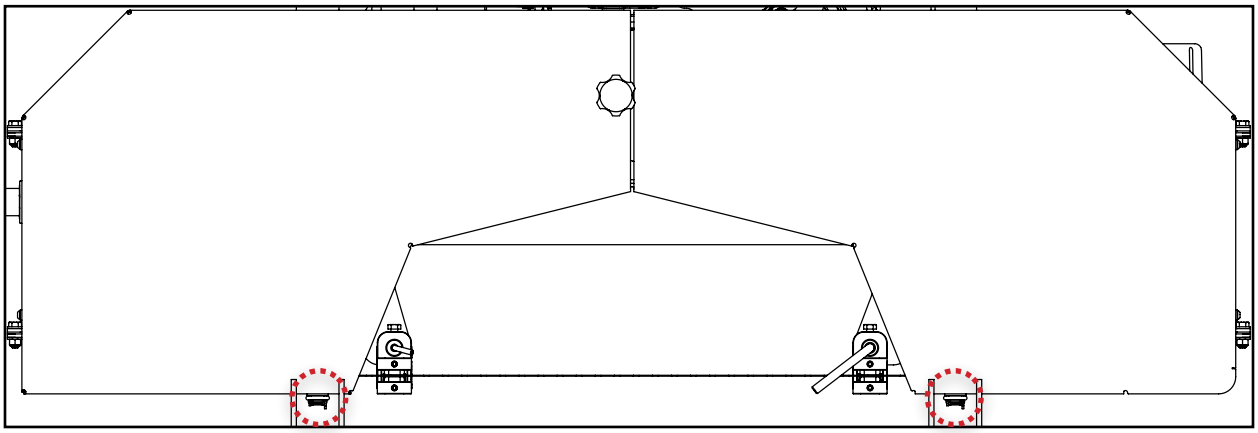

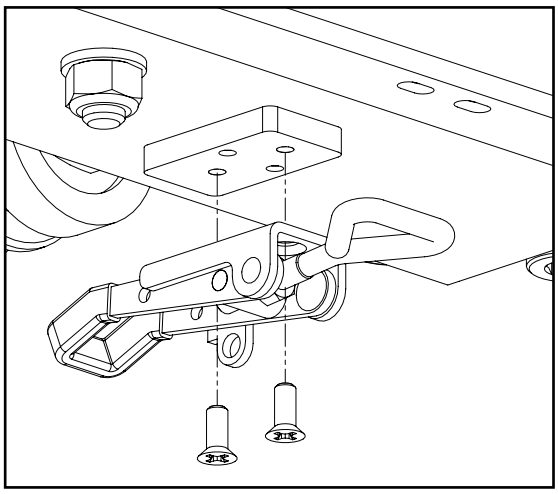

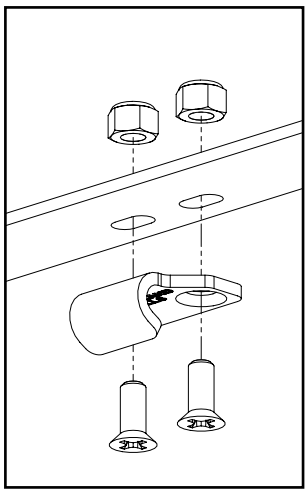

TIGHTEN CARRIAGE WHEEL BOLTS

Tighten the four (4) M20 X 120 mm bolts that fasten the carriage wheels to the carriage side plates.

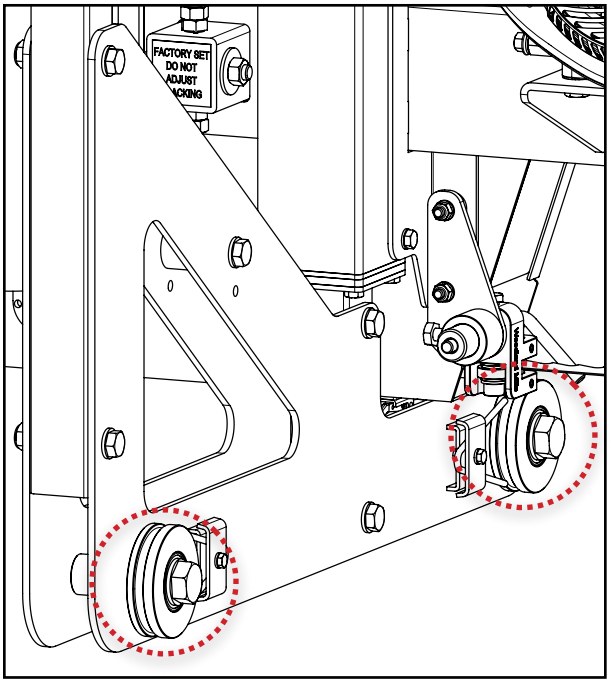

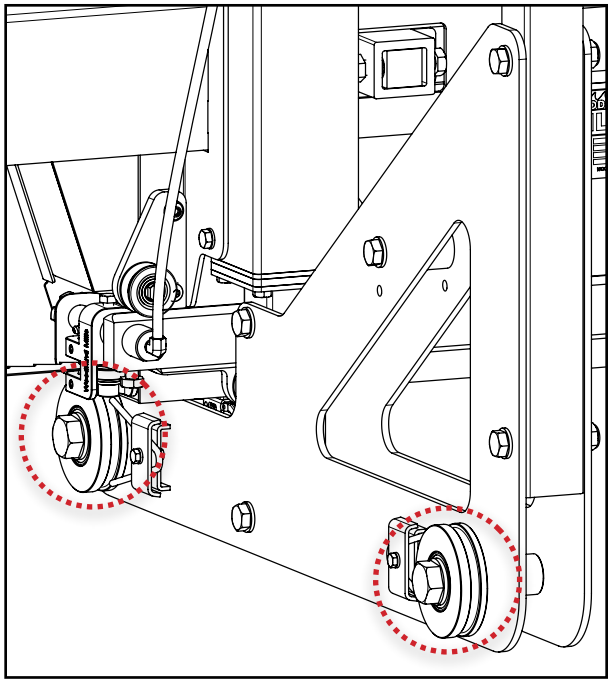

6. PLACING THE HEAD ON THE TRACK

At this point, most of the sawmill head bolts should only be hand tight. They will be fully tightened when the head is on the track and has settled in to a true and square state. There are two methods in which the sawmill head can be lifted onto the track assembly:

METHOD 1

If a tractor or forklift is available, the head can be lifted onto the track with a lifting strap or chain with a minimum rating of 1000 lb. [450 kg]. Attach the lifting strap/chain to the lifting hooks, raise the head up, and rest it on the track so that the grooves in the carriage wheels fit around the track rails. Two people are recommended for this procedure.

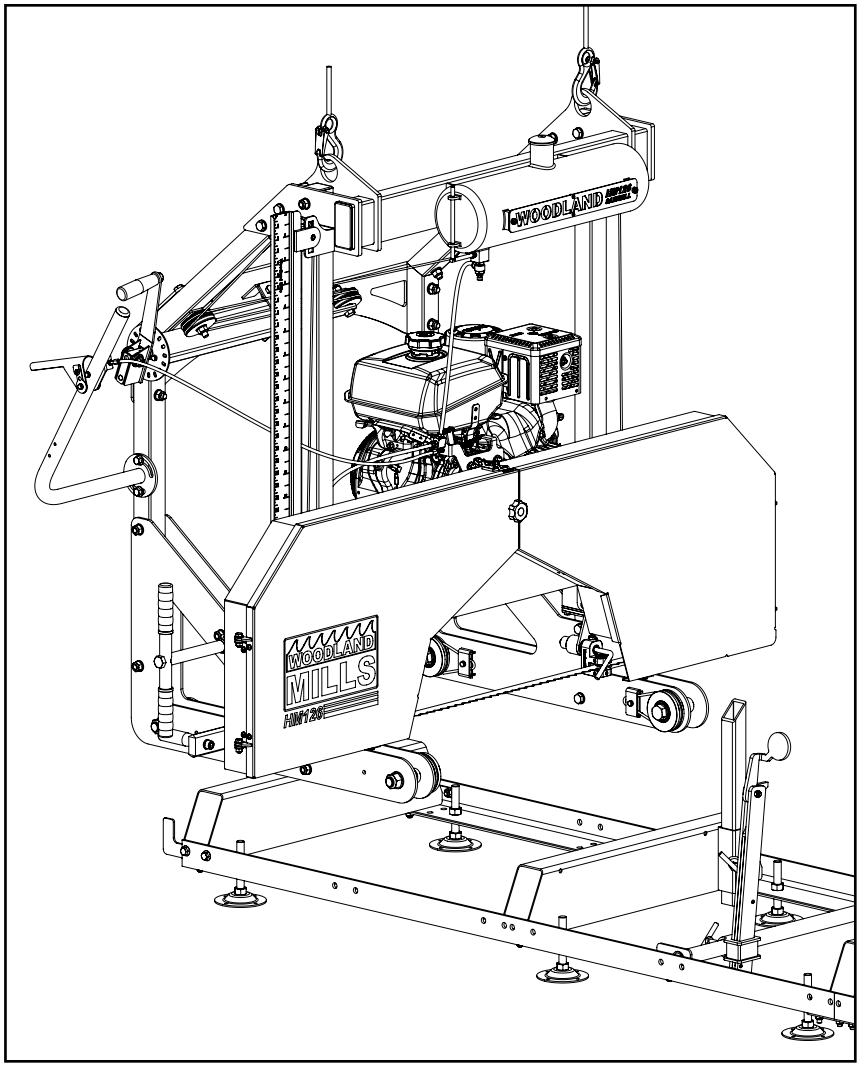

METHOD 2

At least two people are required for this step. Start by removing the two (2) carriage stops from one end of the track. The head can be walked over to the track until positioned behind it (**Figure 1**). Once in this position, tilt the head backwards so that the front two wheels are off the ground. Walk the head forward while the grooves in the two front carriage wheels ride along the track rails (**Figure 2**). Next, using at least two people, lift up the back end of the sawmill head and walk it forward until both rear carriage wheels are seated on the track (**Figure 3**).

Finally, reattach the two (2) carriage stops to the inner faces of the track rails (**Figure 4**).

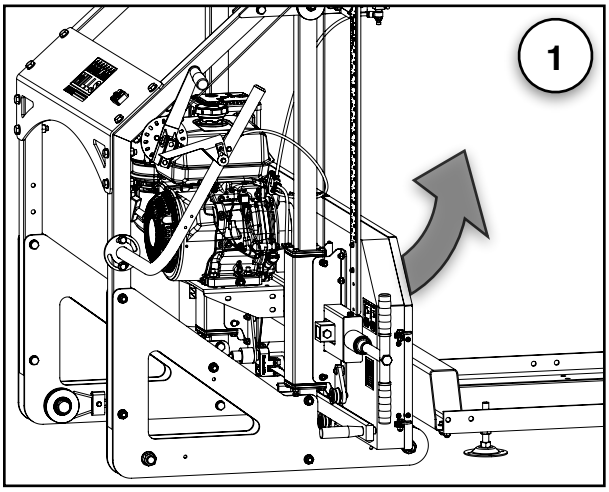

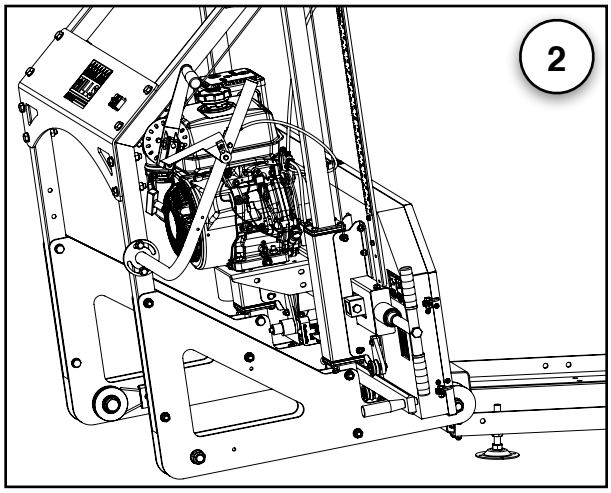

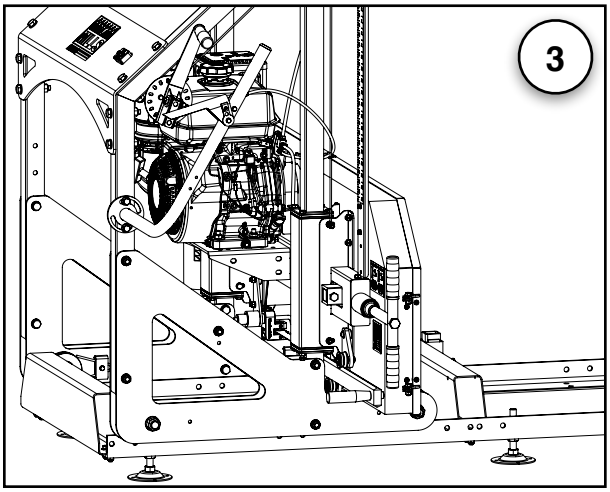

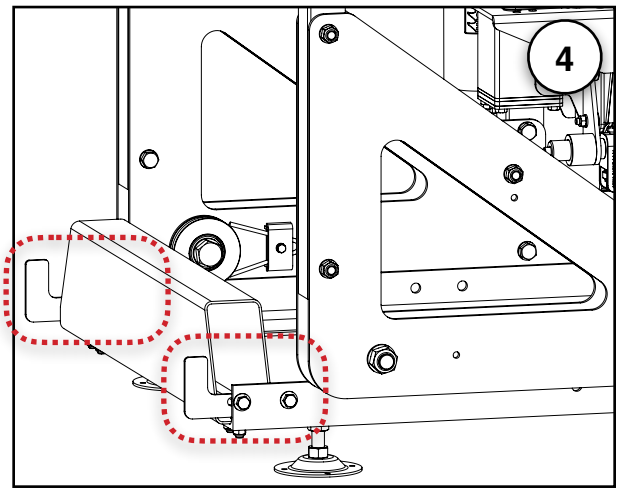

With the sawmill head assembly now resting on the track, grab hold of the one side of the cross beam and perform a shake-down of the head. Shaking the head will help settle the components into their proper position that may have become misaligned either due to tolerances during the assembly process or when the saw head was set on the track.

Afterwards, tighten all of the saw head bolts, post and cross beam hardware.

ROLLING THE SAWMILL HEAD ASSEMBLY

Roll the sawmill head assembly along the full length of the track to ensure it moves freely. If it binds or is difficult to push it is likely the track is not square, straight, and/or level. Make the necessary adjustments to the track and roll the head assembly again. Repeat the track adjustments until the head rolls freely.

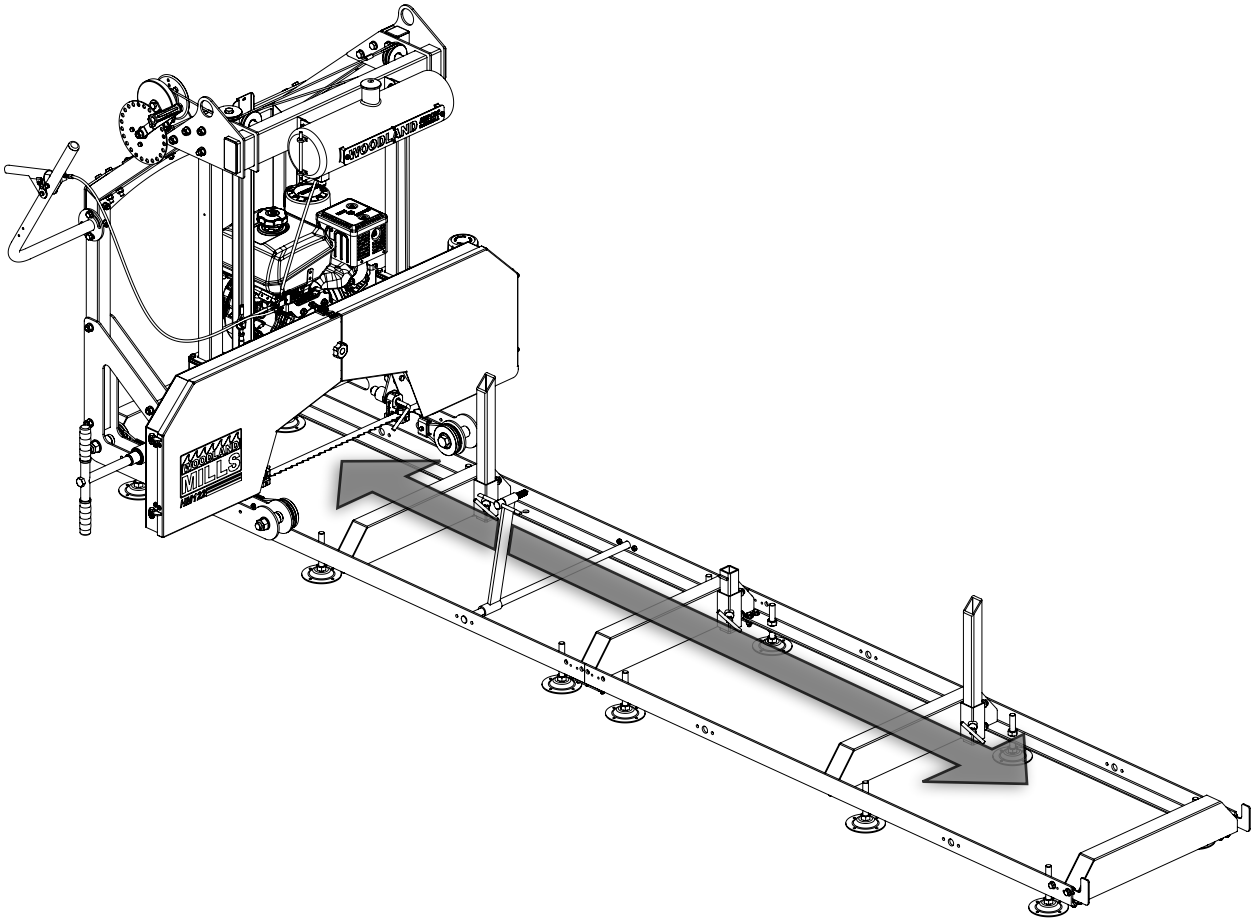

LEVELLING THE SAWMILL HEAD ASSEMBLY

Using a tape measure, measure the distance from the blade to the top of the log bunk on both the left and right side. The distance must be equal. If the measurements are not equal, adjust the lift cable hook end to either raise or lower the right side until it matches the left.

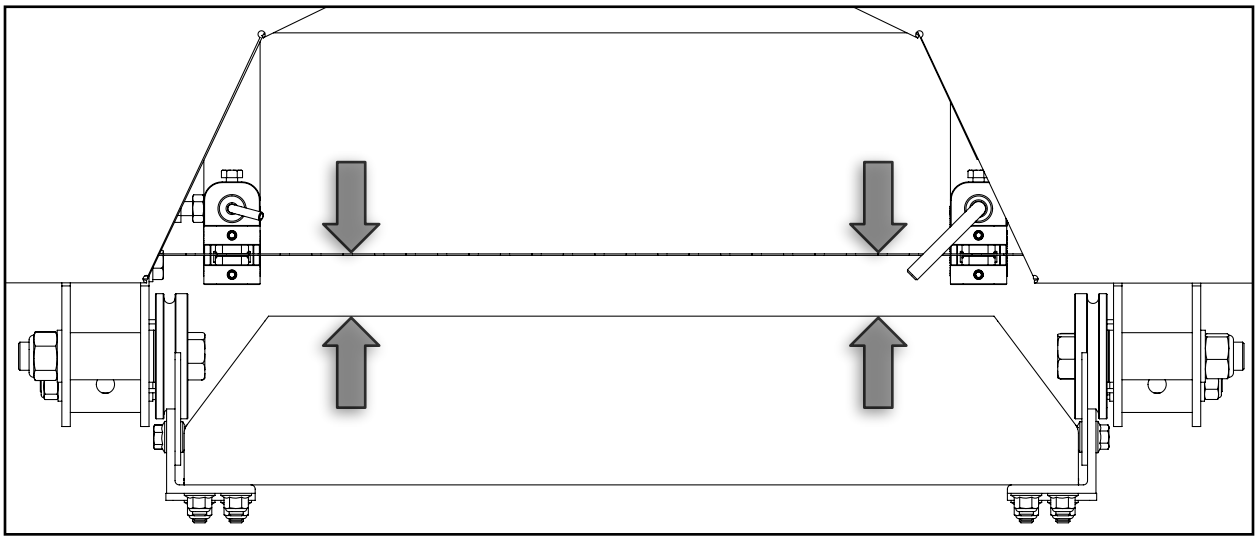

To raise the right side of the sawmill head, loosen the upper M10 flange nut with a wrench, turning it *counter-clockwise*, and spin it by hand several times until it is clear of the bracket. Then use the wrench on the lower flange nut and turn it *clockwise* to raise the saw head.

Double-check the blade-to-bunk height periodically as discussed in the previous step to ensure the saw head isn't raised too much.

To lower the right side of the sawmill head, loosen the upper M10 flange nut with a wrench, turning it *counter-clockwise*, and spin it by hand several times until it is clear of the bracket. Then use the wrench on the lower flange nut and turn it *counter-clockwise* to lower the saw head.

Once the measurements are equal between the blade and bunk on both sides, tighten the upper flange nut to clamp the cable hook securely to the bracket.

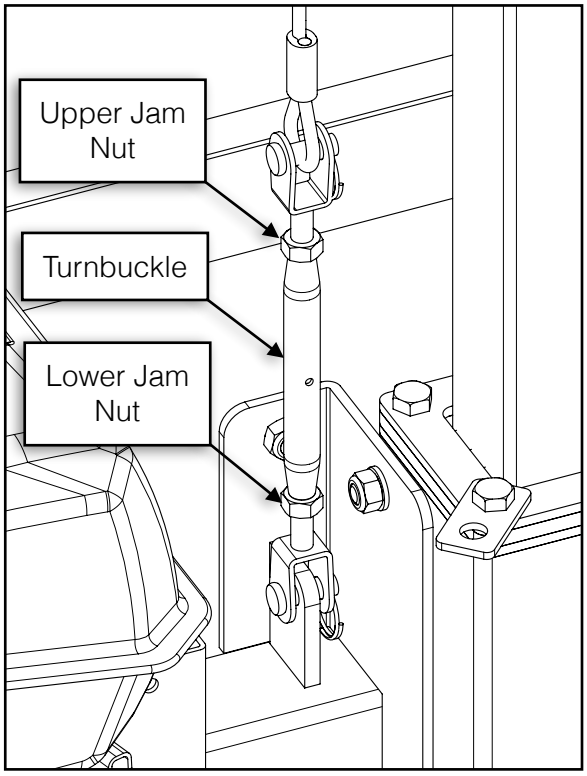

ADJUST THE POST SLEEVE BUSHINGS

Once the sawmill head assembly is level, loosen the eight (8) hex bolts (4 top, 4 bottom) just enough so the bushings can be pushed forwards and backwards. Do this for both sides of the sawhead.

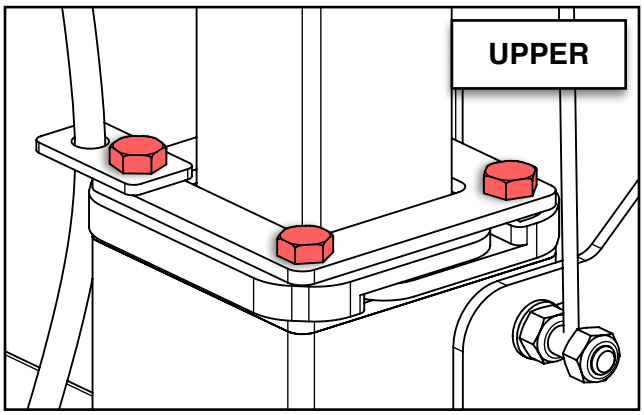

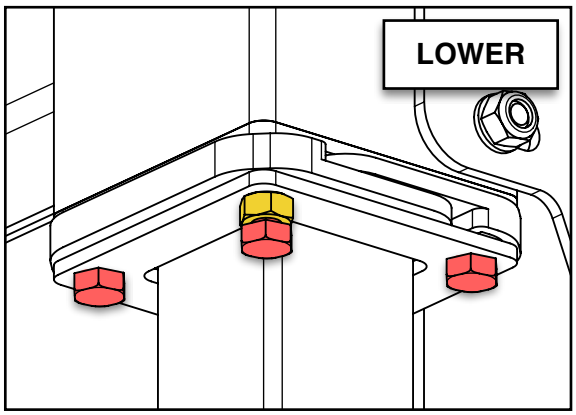

Push the bushings together (front-to-rear) so that there is no gap between the bushing wear pads and the front/rear faces of the post as shown below.

The bushing side "fingers" naturally push inwards so as they wear, continuous pressure is applied to each side of the carriage post.

However, the front & rear wear pads on the bushings do not self-adjust. As a gap appears over time due to wear, simply loosen two (2) bolts on one side and push the bushing towards the post until they are flush again.

The bushing holes are slotted to allow for this future adjustment.

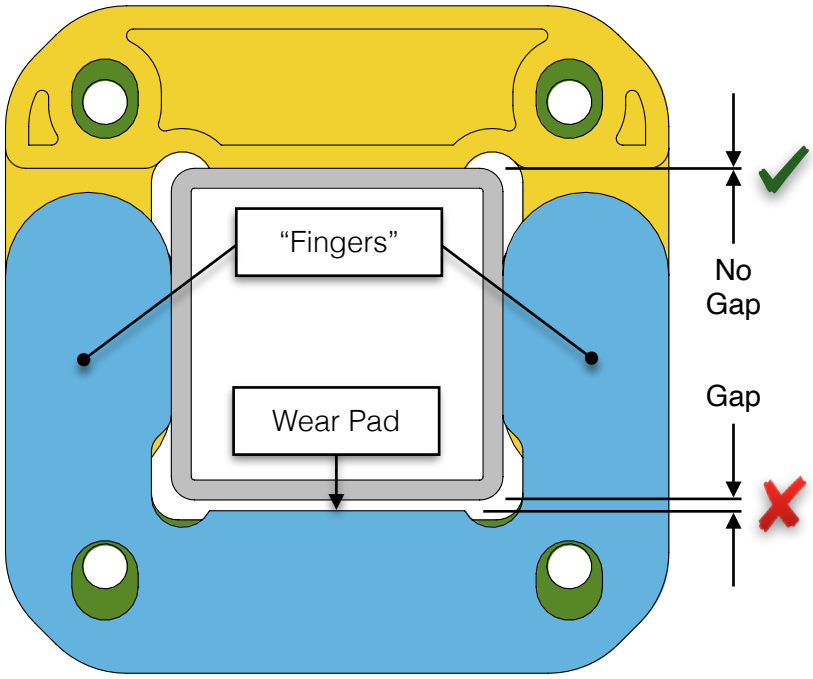

With the wear pads flush with the posts, tighten all the hex bolts and spray the posts with a water resistant silicone lubricant such as "*WD-40 Water Resistant Silicone Spray*" or "*3-in-One Silicone Spray Lubricant*."

GREASING THREADS

Add waterproof grease to the threads of the blade tension T-handle and to the mating bearing face prior to use.

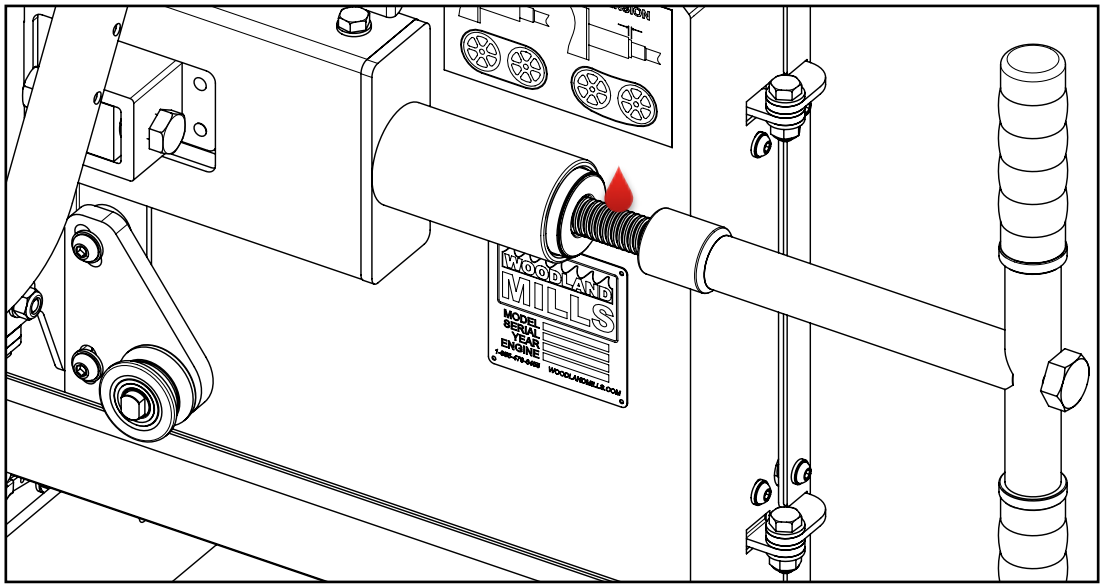

****Note: It is very important to take the tension off the blade by turning the T-handle in the counter-clockwise direction when the sawmill is not in use. Failure to do so will result in flat spots on the rubber belts. These flat spots will cause the mill to vibrate excessively during subsequent uses.****

Add grease to all T-bolt threads on the sawmill track: three (3) on the bunks and one (1) on the log clamp assembly.

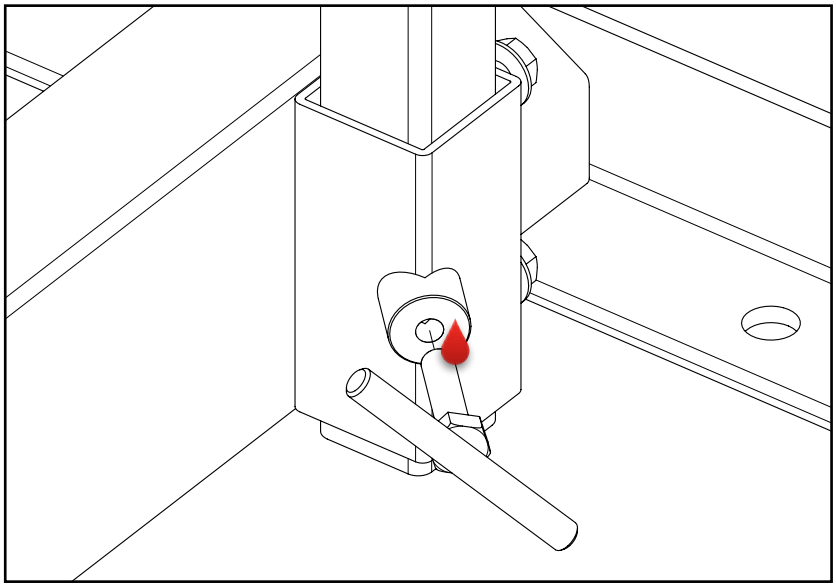

ENGINE OIL

Refer to the engine manual before using your sawmill. Please note that the engine does not contain any gasoline or engine oil when it is shipped. Furthermore, the engine is equipped with an oil alert system, meaning that if the crankcase oil level is low or empty, the power is cut to the spark plug and it will not start.

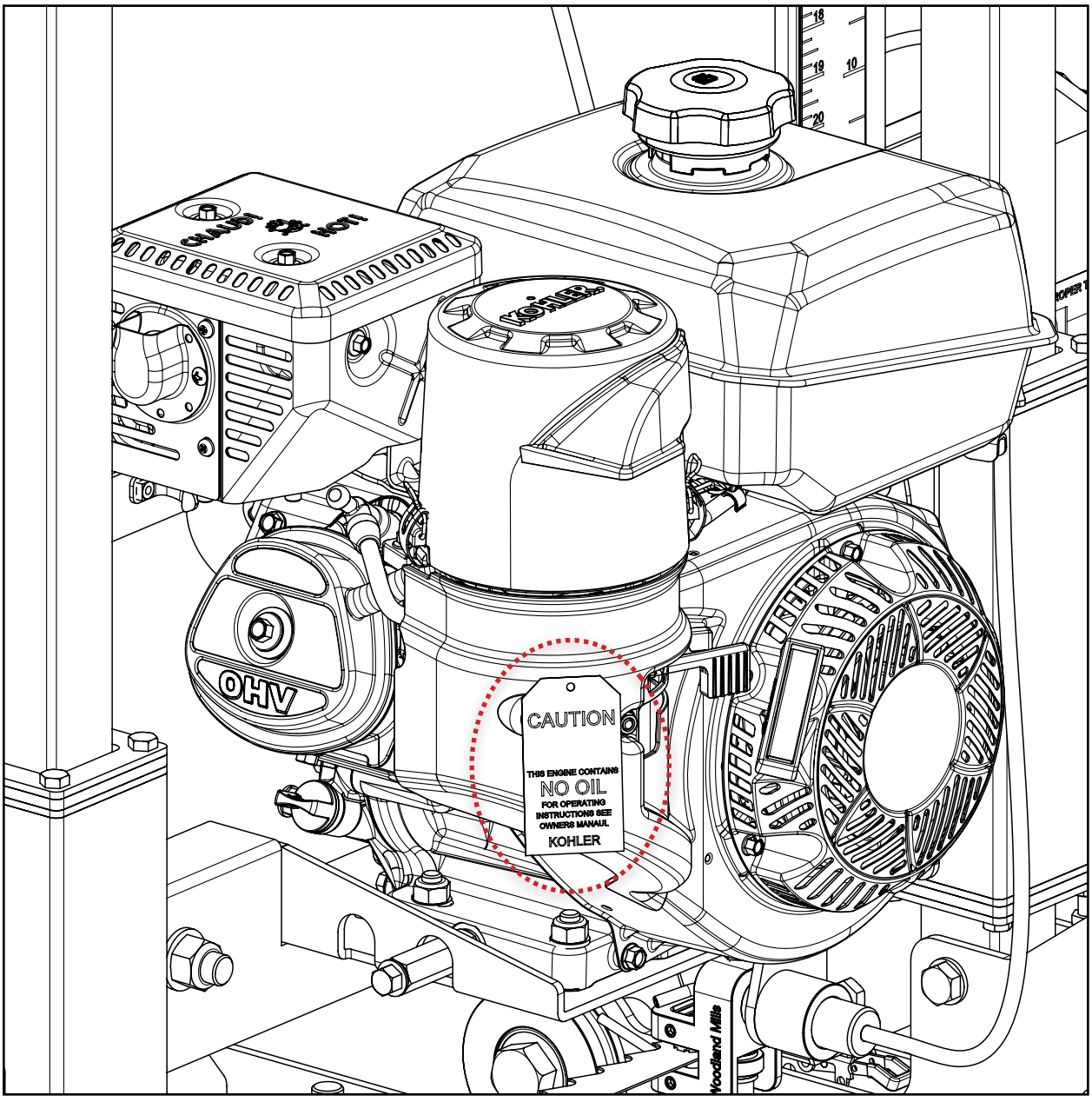

When changing the engine oil, follow the instructions on the next page.

The engine comes with a brass oil drain extension to make oil changes easier. When removing the drain plug, use a wrench to hold the brass extension stationary while a second wrench loosens the plug. Failure to follow this procedure could damage the threads in the aluminum engine block and void the warranty.

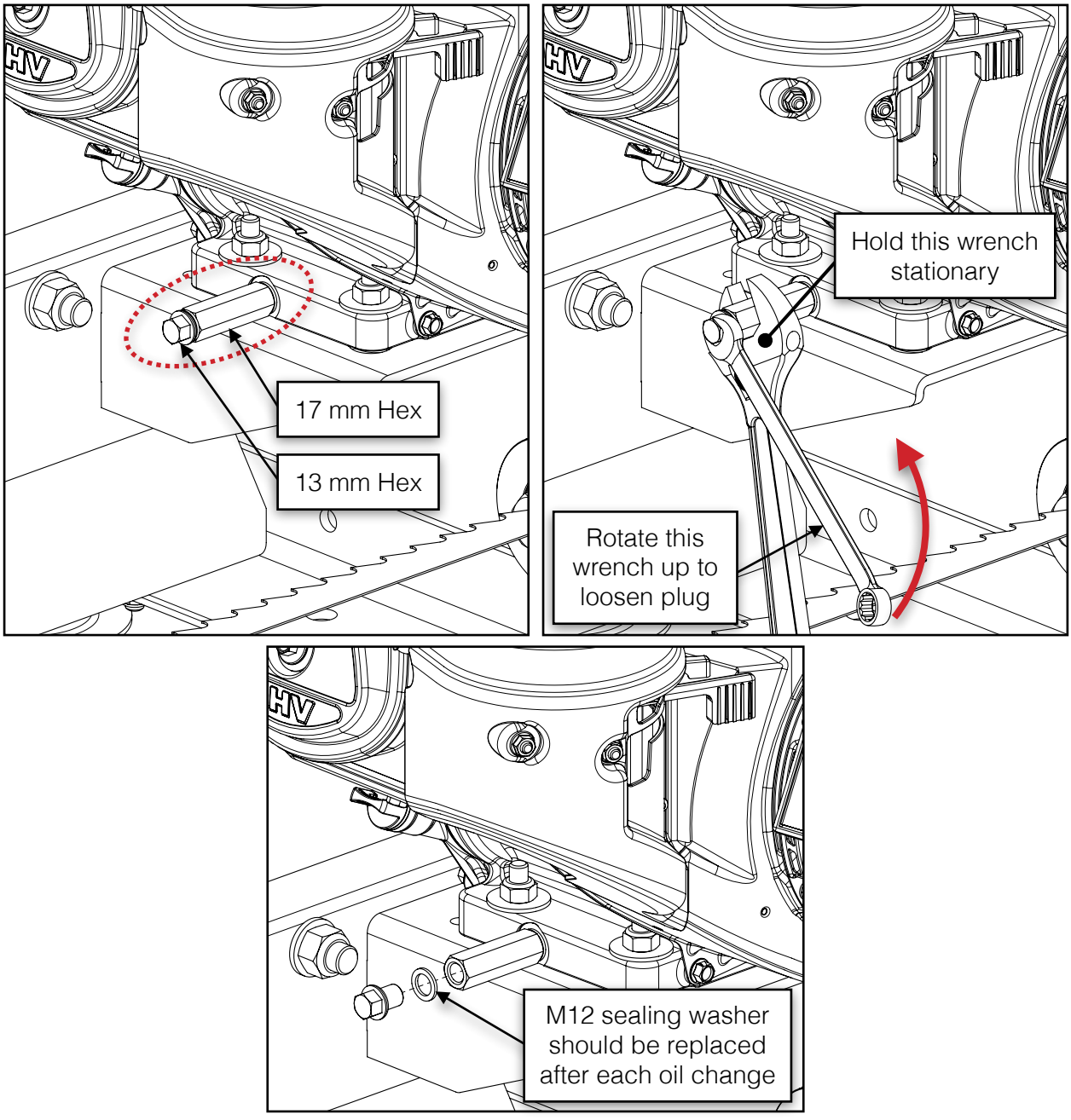

Repeat the process in reverse to re-install the drain plug. Remember to hold the brass extension stationary with a second wrench when tightening the plug.

DIRECTION OF CUT

Always cut in the direction shown below. The log clamp is located to the right side of the log with the log supports on the left. Failure to cut in this direction can cause the log to come loose and possibly cause damage or injury.

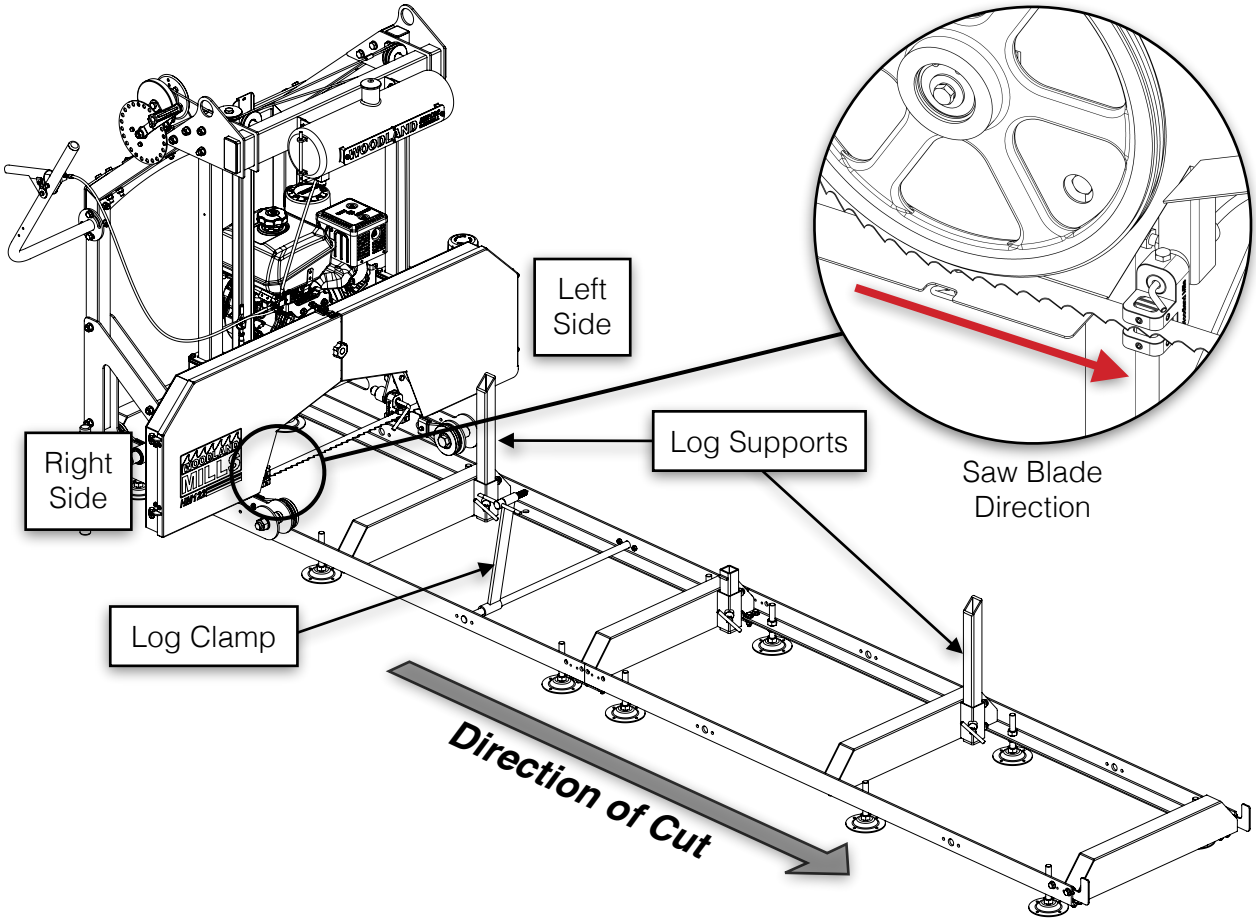

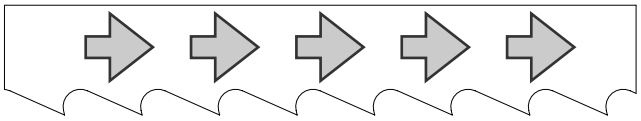

Saw Blade Teeth Orientation

Always ensure the saw blade teeth are orientated such that they are cutting *into* the wood and not being dragged backwards across it. Some blade manufacturers ship their saw blades inside out (backwards) due to manufacturing processes and they must be flipped prior to installation.

****Please follow the instructions in the ***SAWMILL SET-UP PROCEDURES*** section. Failure to do so may result in poor sawing performance, damage or injury.****

SAWMILL SET-UP PROCEDURES

DRIVE BELT TENSION

Make sure the blade is under proper tension when setting the drive belt tension. This ensures the belt is fully seated into the pulley grooves when the deflection is checked. See section, *BLADE TENSION*, for more information.

To check the drive belt tension, push against it firmly and measure the deflection. There should be no more than ¼ in [6 mm] of movement. If the belt deflection exceeds this amount it will need to be tightened as described below.

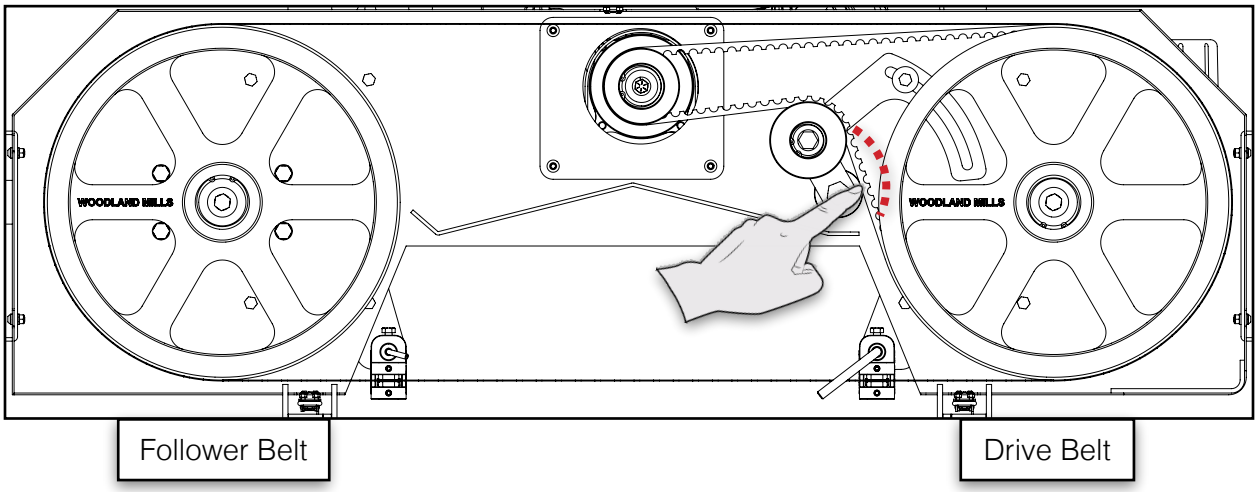

****Never attempt to adjust the belt tension with the engine running. As a safety precaution, remove the spark plug cap.****

Start by loosening the M16 hex bolt (**1A**) and lock nut (**1B**) that secure the belt tensioner mechanism to the sawhead. Then loosen the M8 bolt (**2A**) in the curved slot—its nut (**2B**) is secured in place by an anti-rotation device and does not require a second wrench or socket.

****Only loosen the bolts approx. one turn—do not remove them.****

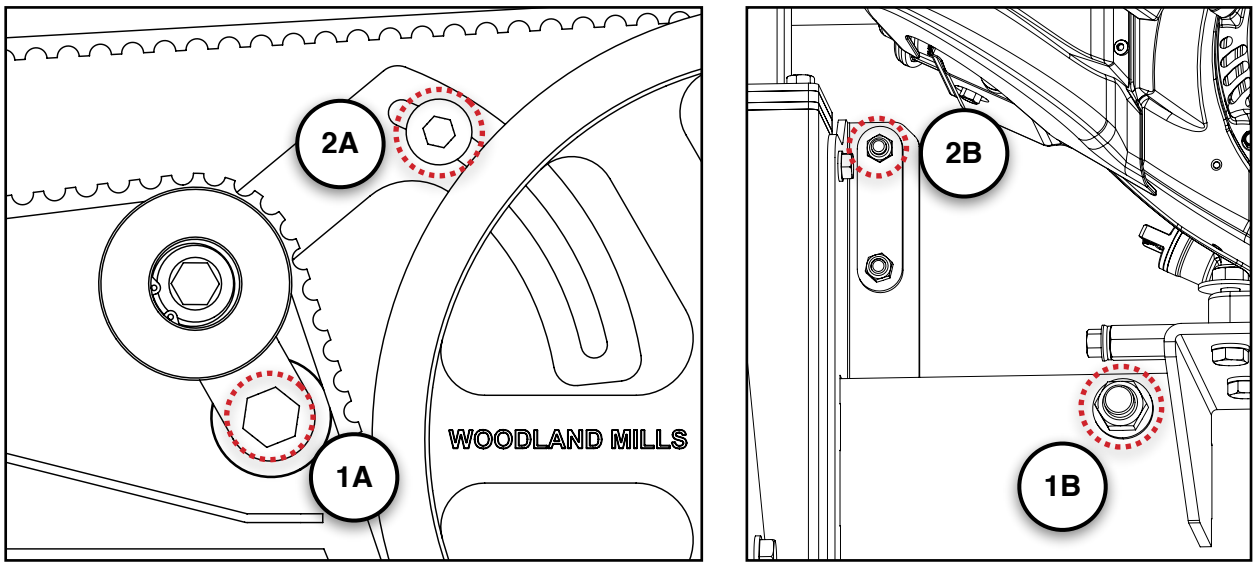

Once both bolts are loose, firmly push the belt tensioner towards the band wheel until the belt is tight (**#1**), then tighten the upper bolt in the curved slot in a clockwise direction using a 13 mm socket (**#2**). Re-check the belt tension to ensure a maximum of ¼ in [6 mm] deflection and then tighten the M16 bolt and lock nut when the deflection is correct (**#3**).

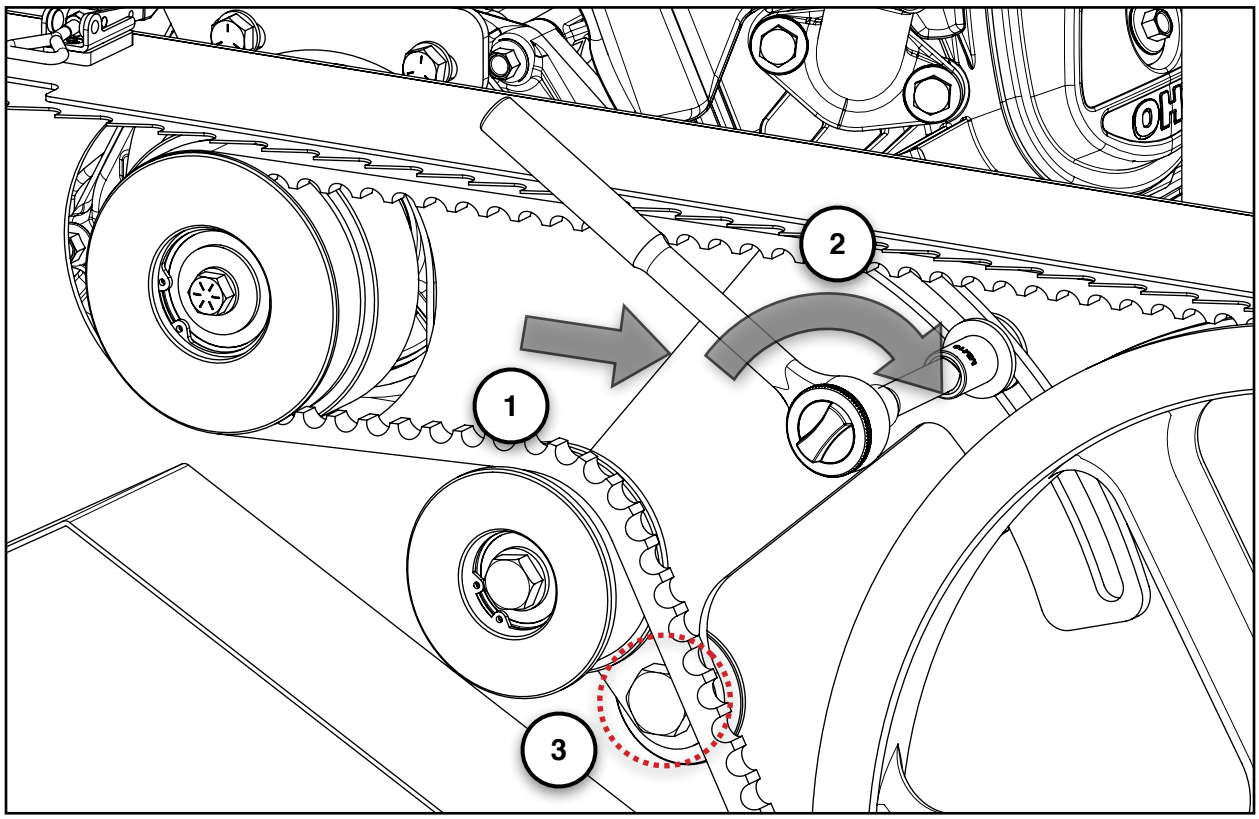

BLADE TENSION

Proper blade tension is achieved when the thrust bearing is flush with the outer face of the spring washer holder after turning the T-handle clockwise.

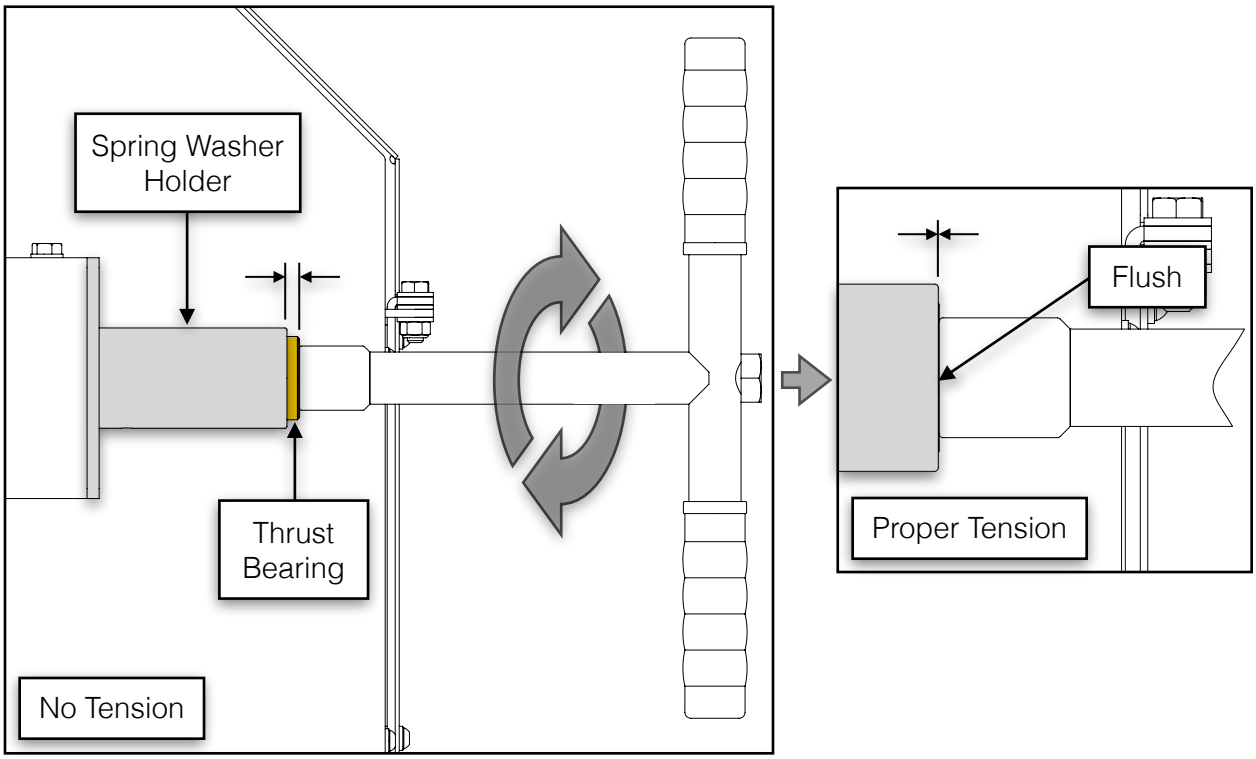

If the spring washer holder is removed for maintenance (e.g. greasing or replacement), ensure the twenty-four (24) Belleville washers inside are oriented and re-installed as shown in the graphic below. There are five (5) groups of four (4)—each made up of two (2) opposing nested pairs—with a separate nested pair at each end.

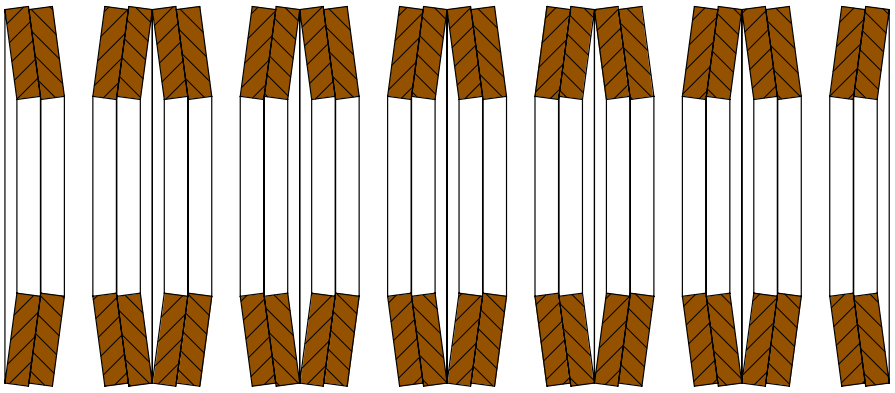

BLADE TRACKING

Never attempt to adjust the blade tracking with the engine running. As a safety precaution, remove the spark plug cap. Gloves and safety glasses should be worn when working with the blade as it is extremely sharp.

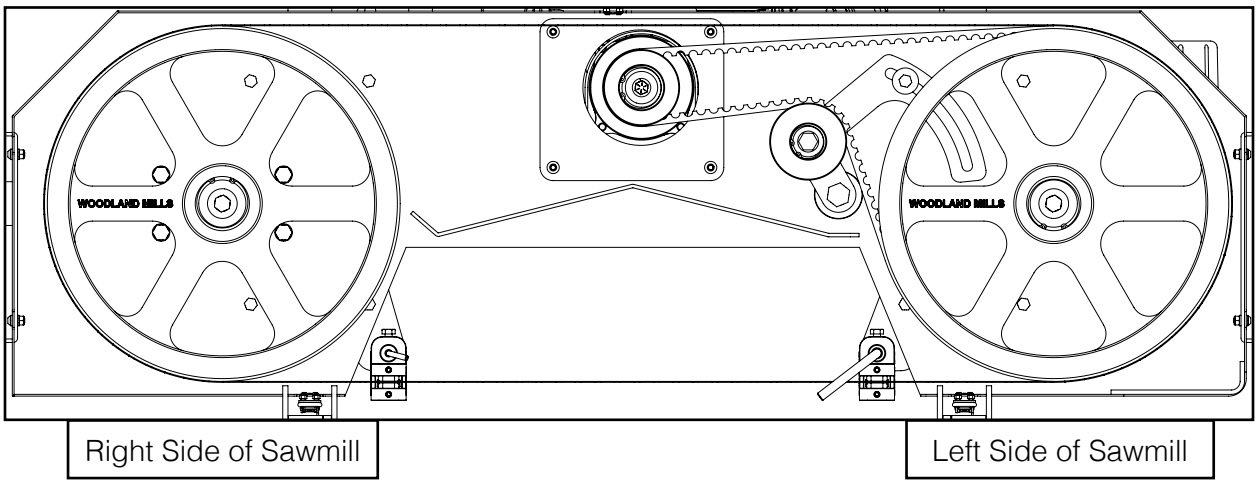

The blade should run with the same tooth-to-front band wheel face distance on both the drive and follower sides: ~⅜ in [9 mm] ideally. The back of the blade will be just proud [~.04 in / 1 mm] of the rear face of the band wheel at this distance and can be a quicker check than using a tape measure or scale. If an adjustment on either side is required, the steps on the following pages detail the procedure.

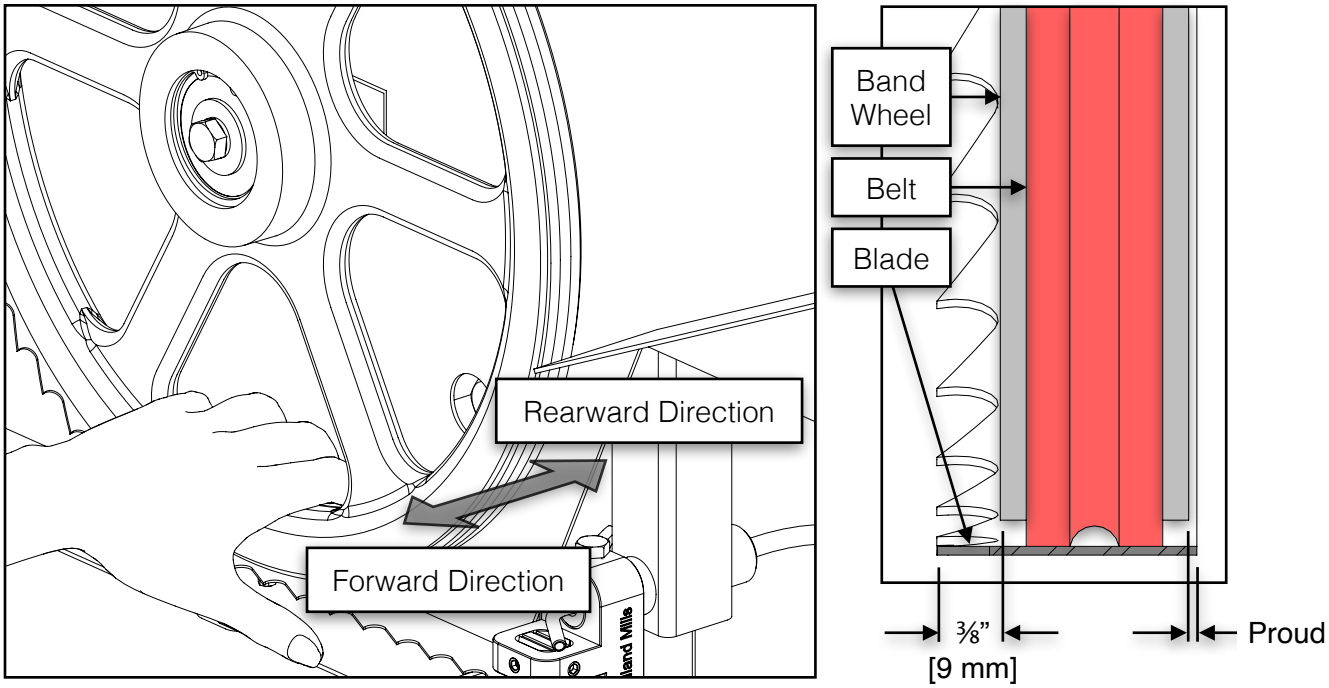

REDUCING THE BLADE TENSION

Loosen the blade guide holder assembly bolt using a socket/wrench. The shaft should now be free to slide rearward and out of the way. Perform this step on both blade guide assemblies. This ensures the guide bearings will not influence the tracking of the blade whilst being adjusted.

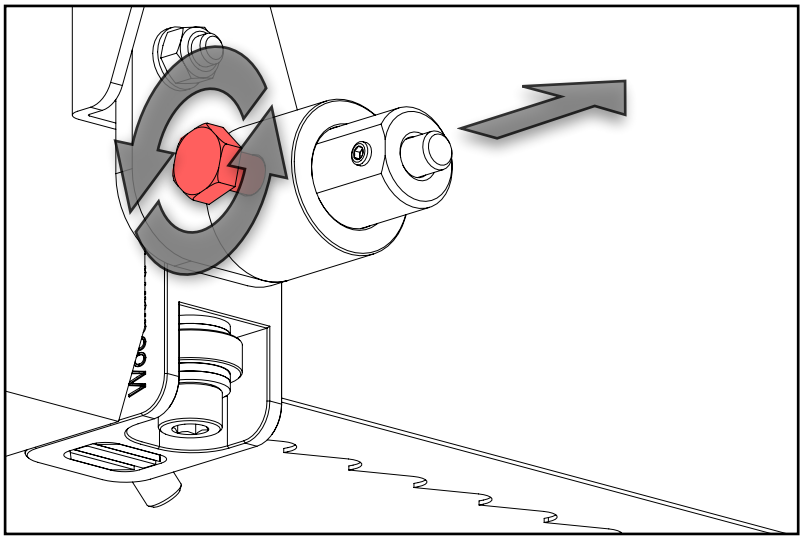

Take some tension off the blade by turning the tension handle in the counter-clockwise direction one full turn from its fully-tensioned position.

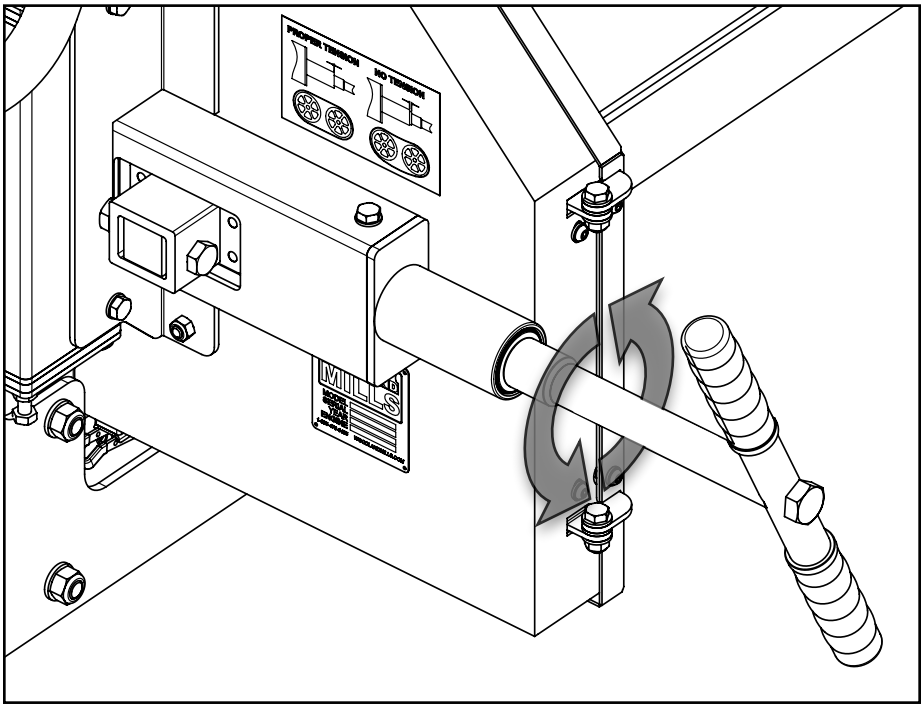

ADJUSTING THE FOLLOWER SIDE TRACKING

The follower side band wheel shaft is connected to the RapidChange™ blade system. Once the tracking is set, it maintains these settings even without a blade on the sawmill, allowing for quick and simple blade/belt changes. The two (2) bolts at the rear of the follower shaft are used to adjust the pitch angle of the band wheel to track the blade.

To move the blade ***forward***—or ***out***—on the band wheel, start with the right-hand bolt by turning it *counter-clockwise* (**#1**) so that it moves ***out*** from the sawmill. Turn it ½ turn then snug the left-hand bolt by turning it *clockwise* (**#2**) to fix the follower band wheel shaft in plate.

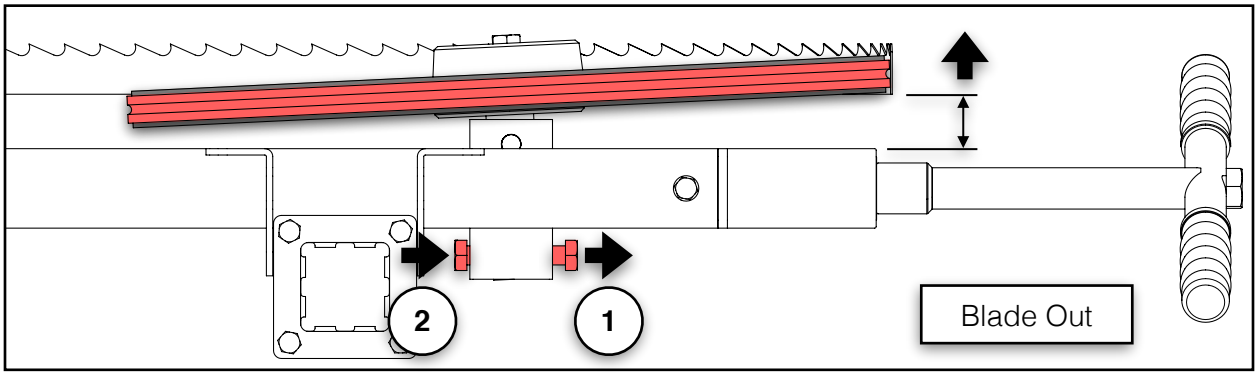

Alternatively, to move the blade ***rearward***—or ***in***—on the band wheel, start with the left-hand bolt by turning it *counter-clockwise* (**#2**) so that it moves ***in*** towards the sawmill. Turn it ½ turn then snug the right-hand bolt by turning it *clockwise* (**#1**) to fix the follower band wheel shaft in plate.

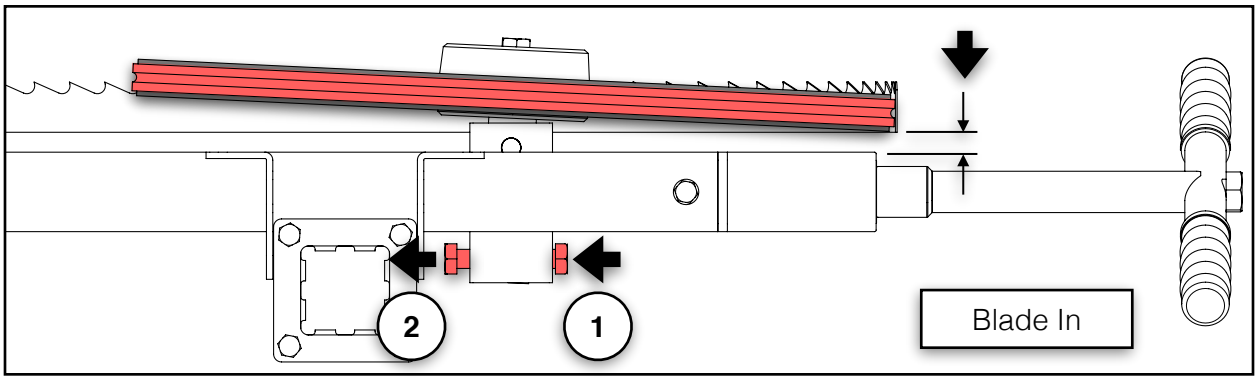

A simple phrase to help remember which way to adjust the tracking bolts is: **IN is IN, and OUT is OUT**. When the bolts move in towards the sawmill, the blade moves *in*. When the bolts move out away from the sawmill, the blade moves *out*.

****Note that the band wheel angle shown in these graphics has been exaggerated and some components have been removed for clarity.****

Turn the T-handle *clockwise* until proper blade tension is achieved. While wearing gloves, spin the band wheel by hand and observe how the blade tracking has changed. Measure the distance again and repeat the above step to further compensate if required. The ideal measurement is ⅜ in [9 mm] or check that the back of the blade is just proud of the back of the band wheel.

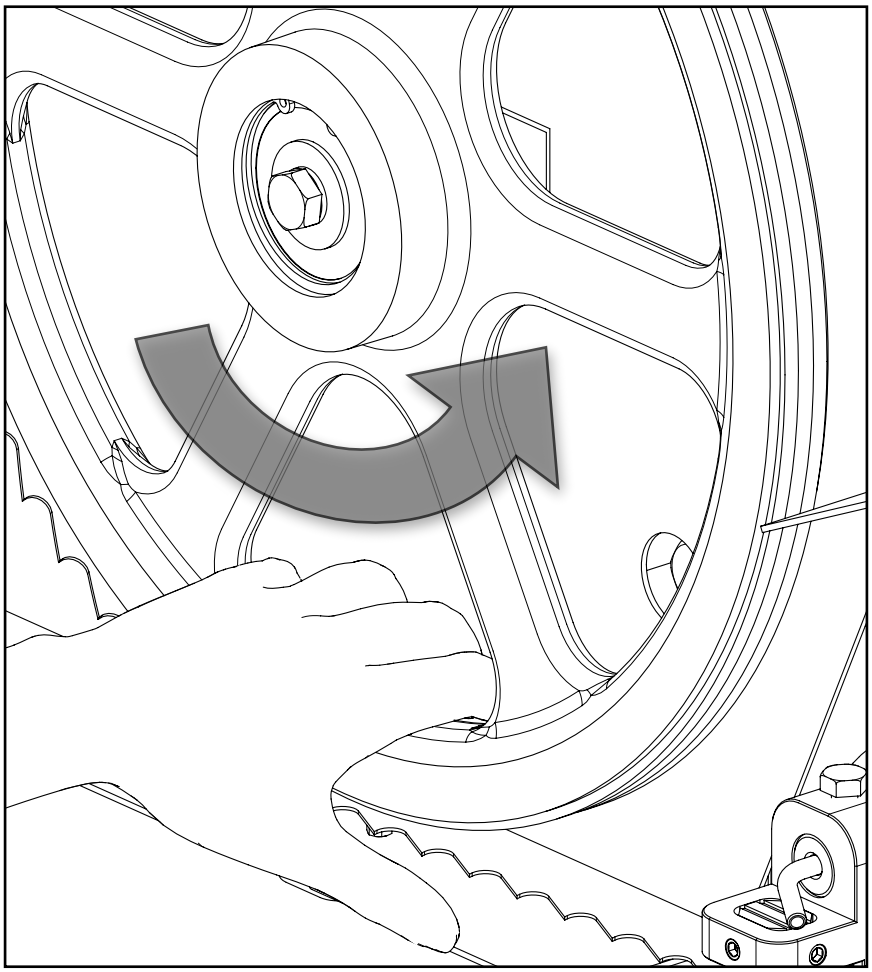

Finally, move the guide block holders forward to the blade. See section, ***BLADE GUIDE ADJUSTMENT*** on the next page for more information.

After the blade tracking is set properly, it should require no further adjusting, even after blade changes. The RapidChange™ blade system maintains the band wheel pitch angle whether or not a blade is on the sawmill.

BLADE GUIDE ADJUSTMENT

Never attempt to adjust the guide blocks or the guide bearing with the engine running. As a safety precaution, remove the spark plug cap. It is also advised to confirm that the blade is tracking properly before performing the steps below. Blade tracking is covered in the ***BLADE TRACKING*** section. Using a 4 mm hex key, loosen the blade guide blocks on both the left and right sides. They should be free to slide up and down.

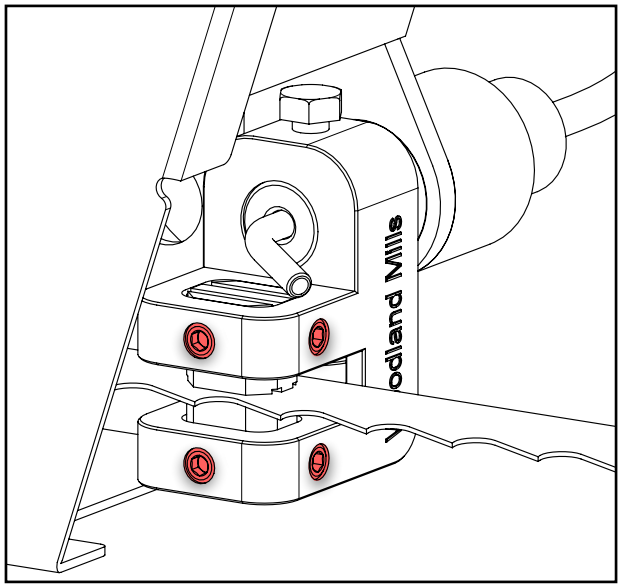

Loosen the blade guide assembly bolts on both guide block holders so that the round shaft is free to slide back and forth. Position it so that there is a thick paper-sized gap (.040 in or 1 mm) between the bearing and the back of blade. Re-tighten the bolt against the flat on the shaft to secure the assembly into position.

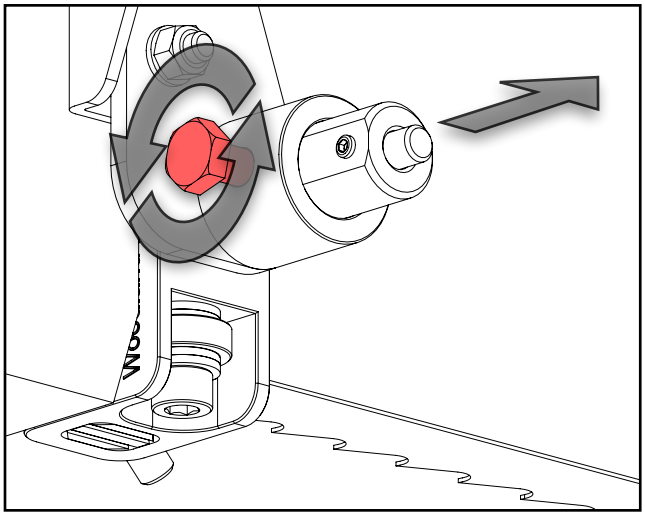

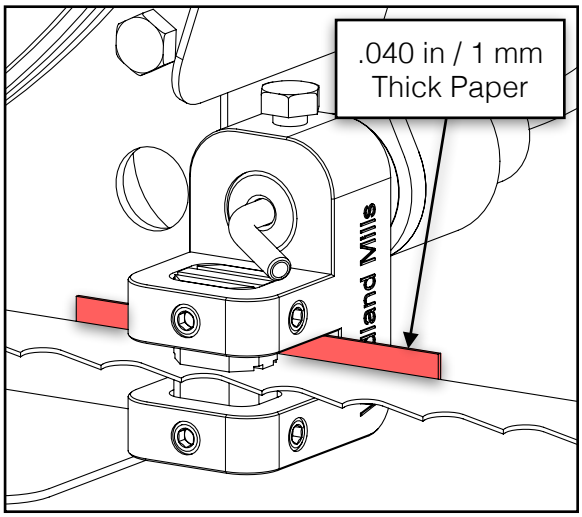

Using a feeler gauge or thick piece of paper (.020 in / 0.5 mm), place it between the blade and both guide blocks and then tighten the set screws.

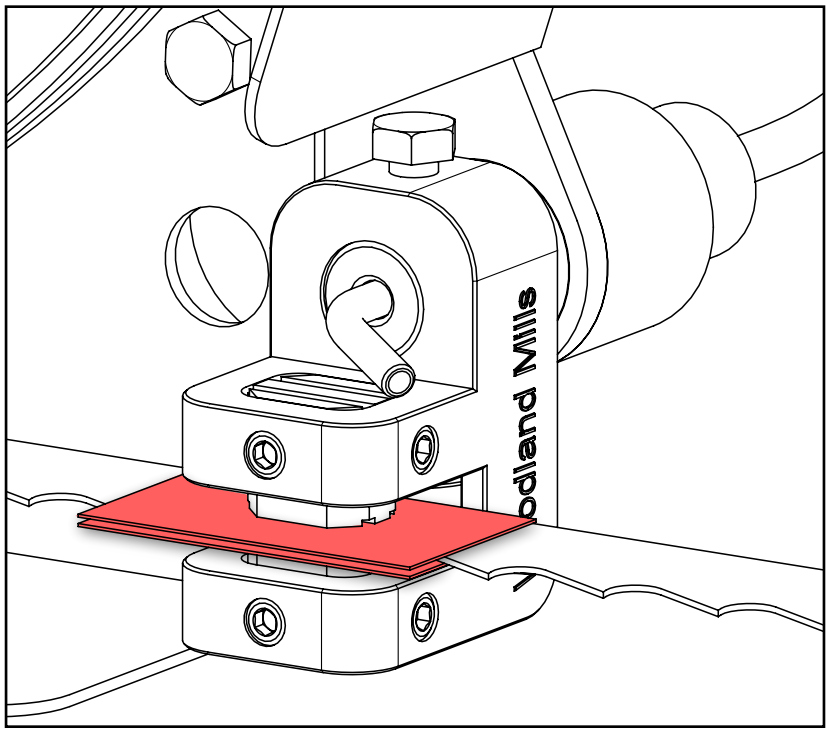

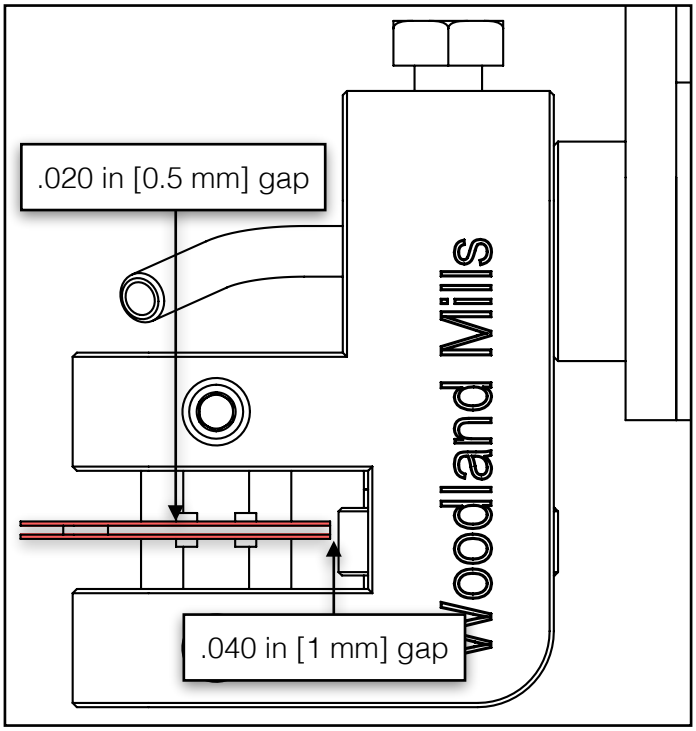

SAWMILL MAINTENANCE

CHANGING THE BLADE

Never attempt to change the blade with the engine running. As a safety precaution, remove the spark plug cap. Gloves and safety glasses must be worn when changing the blade.

Follow these steps to remove an old/worn blade from the sawmill:

1. Turn the green T-handle counter-clockwise to release the tension from the blade until it is loose.
2. Open the band wheel housing doors.
3. Rotate the blade stopper up on the drive-side guide block holder.

The blade is now sufficiently loose and can be easily pulled straight out the front. Install a new blade following the reverse order of steps and then set the proper blade tension.

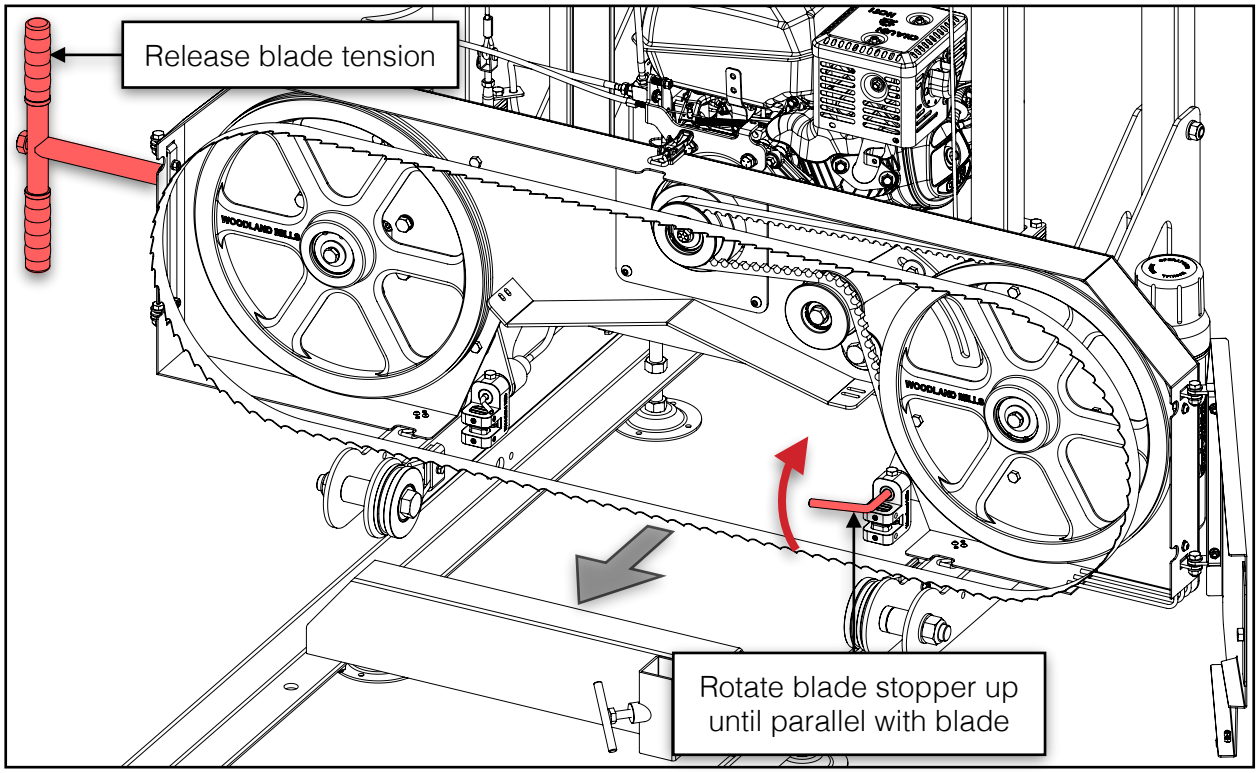

REPLACING BELTS

Never attempt to replace the belts with the engine running. As a safety precaution, remove the spark plug cap. Gloves and safety glasses must be worn when replacing the belts. There are two V-belts on the sawmill: a BX71 cogged belt on the drive side and a Woodland Mills polyurethane belt on the follower side.

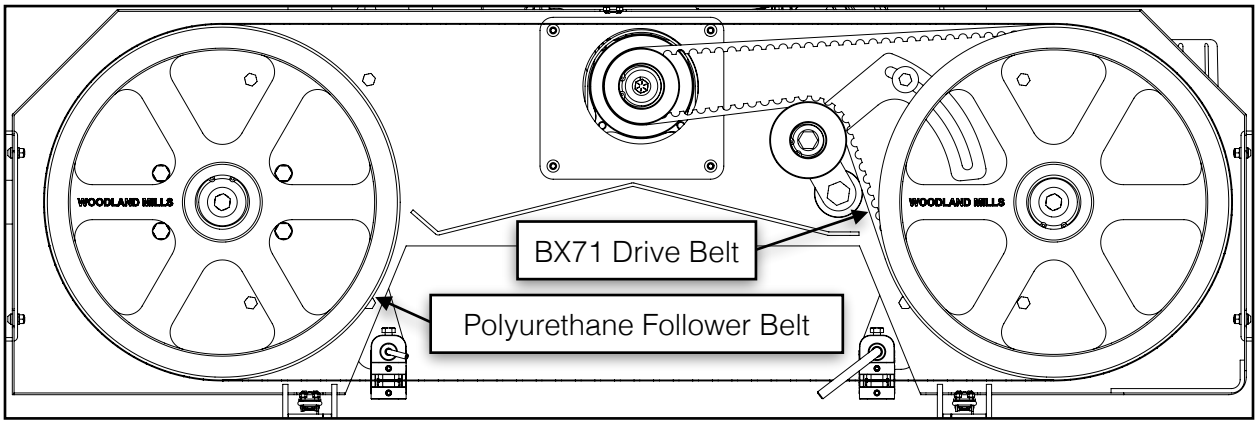

First, remove the blade following the procedure outlined in section, ***CHANGING THE BLADE***.

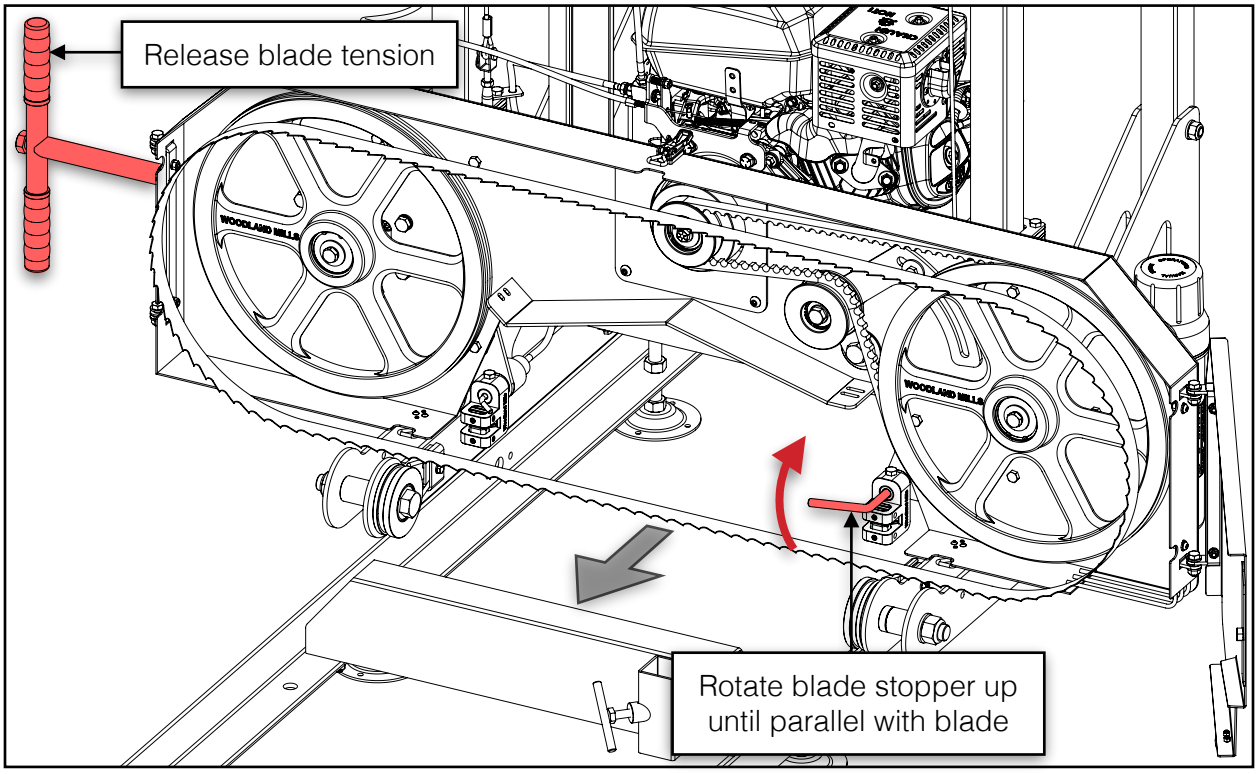

Next, remove the tension from the drive belt by loosening the M8 hex bolt (**#1**) and the M16 hex bolt (**#2**) by approximately one (1) turn—do not remove the bolts.

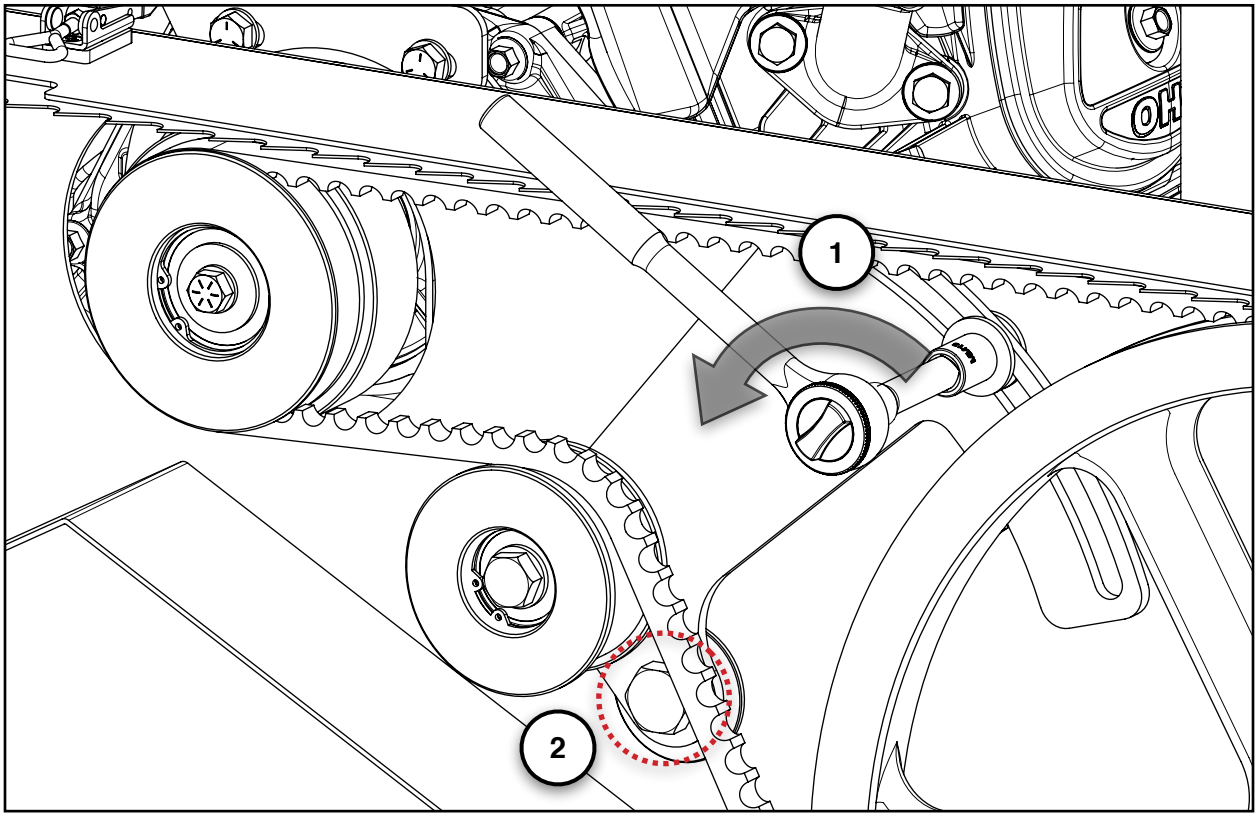

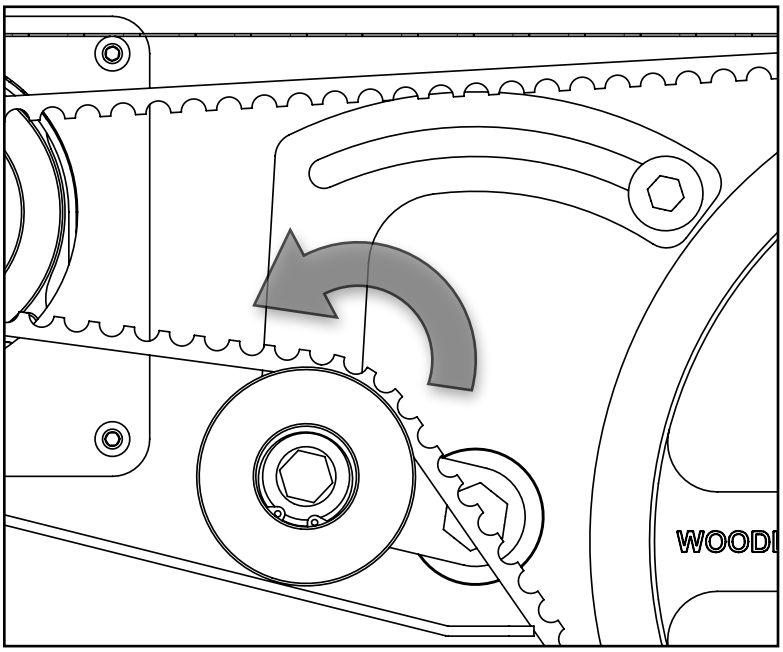

Once both bolts are loose, the belt tensioner will rotate counter-clockwise until the idler pulley comes to rest on the band wheel housing. The belt can now easily be removed by hand and a new belt installed.

Tension the belt following the same procedure as outlined in section, ***DRIVE BELT TENSION***.

The follower belt is changed by prying it off and installing a new one with the aid of slotted screw drivers.

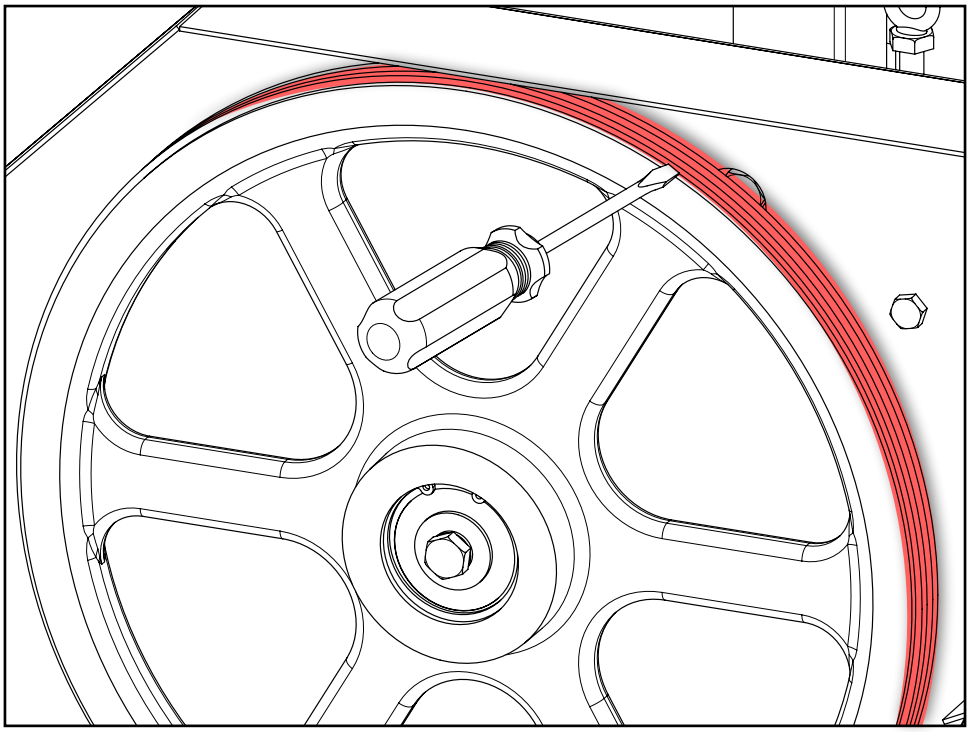

The blade can now be re-installed, band wheel housing doors closed, and proper blade tension set.

****Note that blade tracking should not have changed after replacing the belts. The RapidChange™ blade system maintains the band wheel pitch angle while the blade is removed. Refer to section, *BLADE TRACKING*, for more information.****

TROUBLESHOOTING

Problem/Issue	Possible Causes	Resolution Options
Producing wavy cuts	1. Inadequate blade tension. 2. Improper blade guide set up. 3. Improper blade tracking. 4. Sap build up on blade. 5. Dull blade. 6. Pushing mill too quickly.	1. Tighten blade. Refer to page 57. 2. Gap between guide blocks and blade are incorrect. Refer to page 62. 3. Adjust blade tracking. Refer to page 58. 4. Install new blade. Refer to page 64. Always use blade lubricant. 5. Install new blade. Refer to page 64. 6. Slow feed rate down and push head slower through log.
Last board is tapered or narrow in middle	1. Tracks are not level.	1. Tracks need to be checked with level and adjusted to be square. They also need to be set up on firm, sturdy base so deflection does not occur from logs or sawmill head.
Blade dulls quickly	1. Logs are not clean. 2. Foreign objects in log.	1. Logs may contain dirt/sand causing blades to wear prematurely. 2. Tree may contain nails, staples, old fencing etc.
Blade comes off band wheels	1. Inadequate blade tension. 2. Improper blade guide set up. 3. Improper blade tracking. 4. Belts are worn. 5. Dull blade. 6. Pushing mill too quickly.	1. Tighten blade. Refer to page 57. 2. Gap between guide blocks and blade are incorrect. Refer to page 62. 3. Adjust blade tracking. Refer to page 62. 4. Install new belts. Refer to page 65. 5. Install new blade. Refer to page 64. 6. Slow feed rate down and push head slower through log.
Blades are breaking	1. Too many blade sharpenings. 2. Inadequate blade tension. 3. Improper blade guide set up. 4. Improper blade tracking. 5. Pushing mill too quickly.	1. Replace blade. Refer to page 64. 2. Binding between guide blocks when blade is too loose. Tighten blade. Refer to page 57. 3. Gap between guide blocks and blade are incorrect. Refer to page 62. 4. Adjust blade tracking. Refer to page 58. 5. Slow feed rate down and push head slower through log.
Blade is slowing down or stopping when milling	1. Inadequate blade tension. 2. Improper drive belt tension. 3. Pushing mill too quickly.	1. Tighten blade. Refer to page 57. 2. Belts are worn or too loose. Replace. Refer to page 65. 3. Slow feed rate down and push head slower through log.
Mill is not cutting or cutting very slowly	1. Dull blade. 2. Blade is on backwards.	1. Install new blade. Refer to page 64. 2. Remove blade and flip it inside out. The teeth should be facing in the direction of the log supports.
Mill is vibrating excessively	1. Log is not clamped securely. 2. Belts are deformed. 3. Band wheel bearing issue. 4. Pushing mill too quickly. 5. Loose bolts. 6. Post sleeve bushings worn.	1. Ensure log is clamped firmly resting on log bunks and against log supports. 2. Belts may have flats in them from leaving blade tension tight when not in use. Replace them. Refer to page 65. 3. Inspect and replace the band wheel bearings if worn. 4. Slow feed rate down when milling. 5. Check all bolts to ensure they are tight. 6. Adjust the post sleeve bushings or replace them. Refer to page 50.

PARTS LIST

Highlighted rows are items specific to HM122-9.5 (9.5 Horsepower) sawmill.

Item	Quantity		Part No.	Description
	9.5 hp	7 hp		
1	4	4	0001459	TRACK RAIL
2	2	2	0001457	LOG BUNK, END
3	3	3	0001458	LOG BUNK
4	2	2	0001463	REINFORCEMENT PLATE
5	4	4	0001055	CARRIAGE STOP
6	12	12	0001070	LEVELLING FOOT
7	1	1	0001460	LOG CLAMP CONNECTING ROD
8	1	1	0001461	LOG CLAMP ARM
9	1	1	0001462	LOG CLAMP
10	2	2	0001056	LOG SUPPORT, LONG
11	2	2	0001465	LOG SUPPORT, SHORT
12	3	3	0001059	T-BOLT, M10 X 1.5, 40 mm LG
13	1	1	0002071	BACK BEAM
14	2	2	0002063	POST SLEEVE
15	8	8	0004235	U-SHAPED POST SLEEVE BUSHING
16	4	4	0001126	POST SLEEVE LOCKING PLATE
17	1	1	0001020	WATER TUBE BRACKET, FLAT
18	1	1	0002058	RAPIDCHANGE MOUNTING PLATE
19	1	1	0002059	RAPIDCHANGE TENSION BLOCK
20	1	1	0002054	RAPIDCHANGE SHAFT SLEEVE
21	1	1	0002241	RAPIDCHANGE TENSION BAR, TORQUE GAUGE, TR18X3 THD
22	1	1	0002060	RAPIDCHANGE BACK PLATE
23	2	2	0002350	HEX BOLT, M12 X 1.25, 20 mm LG, 2.5 mm CHAMFER
24	1	1	0003117	SPRING WASHER HOLDER, RAPIDCHANGE
25	6	6	0002637	SPRING WASHER HOLDER SPACER, RAPIDCHANGE
26	1	1	0001029	TENSION HANDLE
27	2	2	0001030	HANDLE GRIP, GROOVED, 26 mm ID, 108 mm LG
28	4	4	0002023	SPACER, ADJUSTABLE BLADE GUIDE
29	1	1	0002072	BLADE GUIDE HOLDER BRACKET, RIGHT
30	1	1	0002073	BLADE GUIDE HOLDER BRACKET, LEFT
31	2	2	0001093	GUIDE BLOCK HOLDER
32	1	1	0001096	GUIDE BLOCK HOLDER SHAFT A
33	1	1	0001091	GUIDE BLOCK HOLDER SHAFT B
34	4	4	0001090	GUIDE BLOCK
35	1	1	0001092	DRIP NOZZLE
36	1	1	0002759	SAW BLADE STOPPER
37	1	1	0002039	BAND WHEEL HOUSING
38	1	1	0002041	BAND WHEEL DOOR, RIGHT
39	1	1	0002043	BAND WHEEL DOOR, LEFT
40	2	2	0001954	BAND WHEEL HOUSING INNER HINGE BRACKET
41	2	2	0001955	BAND WHEEL HOUSING OUTER HINGE BRACKET
42	3	3	0003161	LATCH SPACER
43	3	3	0002248	ADJUSTABLE DRAW LATCH
44	1	1	0001659	KNOB, MULTI-LOBE, 48 mm OD, M8 X 1.25, 17 mm LG
45	1	1	0001104	DRIVE SHAFT

Item	Quantity		Part No.	Description
	9.5 hp	7 hp		
46	1	1	0001993	FOLLOWER SHAFT, RAPIDCHANGE
47	2	2	0001482	BAND WHEEL, 16 in
48	1	1	0001483	V-BELT, FOLLOWER, B1206Li, 16 in DIA
49	1	1	0002017	BELT TENSIONER SHAFT SPACER
50	1	1	0002752	BELT TENSIONER ADAPTER PLATE W/ LEVELLING WASHER HOUSING
51	1	1	0002644	BELT TENSIONER IDLER SHAFT, LEVELLING WASHERS
52	1	1	0002645	BELT TENSIONER PULLEY, SINGLE BEARING, SPHERICAL ALIGNMENT
53	1	1	0002646	KEY, 8 X 8 mm, 37 mm LG
54	1	1	0002019	NUT LOCKING PLATE
55	1	1	0001655	MANUAL TUBE
56	1	-	0001217	CLUTCH SPACER
57	1	-	0001823	CLUTCH ASSEMBLY, 1 in [25.4 mm] BORE, 87 mm DIA PULLEY
58	-	1	0001508	CLUTCH ASSEMBLY, 3/4 in [19.05 mm] BORE, 80 mm DIA PULLEY
59	1	-	0001137	PARALLEL KEY, 1/4 X 1/4 X 1 in LG
60	-	1	0001877	PARALLEL KEY, 3/16 X 3/16 X 7/8 in LG
61	1	-	0001814	CLUTCH HOUSING GUARD W/ SIDE FLANGES
62	1	1	0002047	ENGINE CUTOUT COVER, GAS
63	1	-	0001983	VALVE MOUNT BRACKET, 9.5 hp
64	1	-	0001984	VALVE ACTUATION TAB, 9.5 hp
65	-	1	0002245	ENGINE BRACKET, 7 hp
66	-	1	0002244	VALVE BRACKET, 7 hp
67	-	1	0001982	VALVE ACTUATION TAB, 7 hp
68	1	1	0001985	CABLE THIMBLE, 10 mm HEX, M6 X 1 THD
69	1	-	0001136	EXHAUST REDIRECT, 9.5 & 14 hp
70	-	1	0004438	EXHAUST REDIRECT, 7 hp
71	1	-	0002079	OIL DRAIN EXTENSION, 56 mm LG, M12 X 1.5 THD
72	-	1	0002080	OIL DRAIN EXTENSION, 61 mm LG, M10 X 1.25 THD
73	1	1	0001485	SAW BLADE, 7/8 in PITCH, 142 TEETH, 1-1/4 WD X 125 LG X .042 in THK
74	2	2	0002101	FRONT POST
75	2	2	0001660	PLASTIC END CAP, RECT, 50 X 50 mm
76	2	2	0002851	BACK POST
77	4	4	0001466	CARRIAGE SIDE PLATE
78	4	4	0001967	SPACER, 32 mm OD, 20.5 mm ID, 10 mm LG
79	4	4	0001966	SPACER, 32 mm OD, 20.5 mm ID, 40 mm LG
80	2	2	0001102	SPACER, 33.5 OD X 13 ID X 50 mm LG
81	4	4	0001037	CARRIAGE WHEEL
82	4	4	0001019	WHEEL SWEEP BRACKET
83	4	4	0001017	WHEEL SWEEP HOLDER
84	4	4	0001018	WHEEL SWEEPER
85	1	1	0002103	CROSS BEAM
86	2	2	0001661	PLASTIC END CAP, RECT, 100 X 50 mm
87	1	1	0002240	LOG SCALE MOUNTING BRACKET
88	1	1	0002097	LOG SCALE GUIDE
89	1	1	0002098	LOG SCALE GUIDE LOCKING PLATE
90	1	1	0002099	LOG SCALE INDICATOR ARROW
91	1	1	0002764	KNOB, MULTI-LOBE, 48 mm OD, M8 X 1.25, 25 mm LG
92	1	1	0002040	LOG SCALE BRACKET
93	1	1	0003233	MAGNETIC SCALE, 27 in, YELLOW
94	1	1	0003235	MAGNETIC SCALE, 27 in, WHITE
95	1	1	0002034	LUBRICANT TANK, 10 L [2.6 gal], MANOMETER/BADGE MOUNT

Item	Quantity		Part No.	Description
	9.5 hp	7 hp		
96	1	1	0001132	TANK CAP
97	1	1	0002110	HM122 NAMEPLATE
98	1	1	0002038	NAMEPLATE BACKING
99	1	1	0002809	MANOMETER PIPE, LUBRICATION TANK
100	1	1	0002691	LUBRICATION TUBING, TANK-TO-ELBOW, 2-3/16 in [55 mm] LG
101	1	1	0002748	LUBRICANT TUBING, 8 mm OD, 28 in [710 mm] LG
102	1	1	0002105	DASHBOARD
103	1	1	0002671	HOUR METER
104	1	1	0001497	WINCH, 1200 lb
105	1	1	0001498	WINCH HANDLE, 1200 lb
106	3	3	0001499	WINCH SPACER, 7 ID, 12 OD, 29mm LG
107	1	1	0001500	CRANK HANDLE INDEX PLATE
108	1	1	0001820	INDEX PLUNGER, M10 X 1.5
109	4	4	0001099	CABLE PULLEY
110	2	2	0002813	SPACER, 12 ID X 18 OD X 5 mm LG
111	1	1	0002768	TURNBUCKLE, 80 mm STROKE, M8 X 1.25 X 60 mm SHANK, 8 mm CLEVIS
112	1	1	0002746	WIRE ROPE LIFT CABLE, 4 mm DIA
113	1	1	0002068	PUSH HANDLE, ADJUSTABLE
114	1	1	0001662	PLASTIC END CAP, CIRCULAR, 32 mm OD
115	1	1	0001021	THROTTLE HANDLE
116	1	1	0001024	THROTTLE CABLE BRACKET
117	1	1	0001112	THROTTLE CABLE BARREL END CLAMP
118	1	1	0002747	THROTTLE CABLE, 56.3 in [1430 mm] LG CABLE, 47.3 in [1200 mm] LG SHEATH
119	1	1	0001839	SERIAL NUMBER LABEL
120	1	1	0001829	BLADE TRACKING WARNING LABEL
121	1	1	0003245	BLADE TENSION LABEL
122	1	1	0002769	DANGER/WARNING COLLAGE LABEL
123	2	2	0002766	CAUTION LABEL, DO NOT OPERATE WITHOUT GUARDS
124	1	1	0002770	DANGER LABEL, MOVING PARTS CUT/CRUSH
125	1	1	0002771	DANGER LABEL, BANDSAW BLADE WILL CUT
126	1	1	BX71	V-BELT, COGGED, BX71
127	1	-	CH395-3149	ENGINE, KOHLER COMMAND PRO HORIZONTAL, 9.5 hp
128	-	1	CH270-3152	ENGINE, KOHLER COMMAND PRO HORIZONTAL, 7 hp
129	4	4	5204-2RS	BALL BEARING, ANG-CONT, SLD, 5204-2RS, 20 mm BORE, 47 mm OD, 20.6 mm WIDE
130	2	2	6000-2RS	BALL BEARING, SEALED, 6000-2RS, 10 mm BORE, 26 mm OD, 8 mm WIDE
131	4	4	6001-2RS	BALL BEARING, SEALED, 6001-2RS, 12 mm BORE, 28 mm OD, 8 mm WIDE
132	1	1	6203-2RS	BALL BEARING, SEALED, 6203-2RS, 17 mm BORE, 40 mm OD, 12 mm WIDE
133	4	4	6305-2RS	BALL BEARING, SEALED, 6305-2RS, 25 mm BORE, 62 mm OD, 17 mm WIDE
134	1	1	51204	THRUST BEARING, SINGLE DIR, 51204, 20 mm BORE, 41.5 mm OD, 15 mm WD W/ HSG
135	1	1	0003452	STEM VALVE, 1/8 in NPT FEMALE, 1/8 in STEM TRAVEL
136	1	1	SLS-03-08	FLOW CONTROL VALVE, RA, 3/8 NPT, 8 mm QUICK-CONNECT TUBE
137	3	3	HDW	FITTING, STRAIGHT, BARBED, 1/8 in NPT, 1/4 in HOSE
138	1	1	HDW	FITTING, ELBOW, 90∞, BARBED, 6 mm ID TUBE, WHITE
139	1	1	HDW	COMPRESSION SPRING, GROUND ENDS, 8.5 OD, 0.9 DIA WIRE, 27 mm LG
140	1	-	HDW	EXTENSION SPRING, 8.5 mm OD, 1.5 mm WIRE, 60 mm LG
141	-	1	HDW	EXTENSION SPRING, 8.5 mm OD, 1.5 mm WIRE, 100 mm LG
142	-	2	HDW	HEX BOLT, M5 X 0.8, 10 mm LG
143	2	2	HDW	HEX BOLT, M6 X 1, 15 mm LG
144	1	1	HDW	HEX BOLT, M6 X 1, 20 mm LG
145	4	4	HDW	HEX BOLT, M6 X 1, 35 mm LG

Item	Quantity		Part No.	Description
	9.5 hp	7 hp		
146	3	3	HDW	HEX BOLT, M6 X 1, 45 mm LG
147	1	1	HDW	HEX BOLT, M6 X 1, 50 mm LG
148	1	1	HDW	HEX BOLT, M6 X 1, 55 mm LG, 18 mm LG THD
149	2	2	HDW	HEX BOLT, M8 X 1.25, 12 mm LG
150	4	4	HDW	HEX BOLT, M8 X 1.25, 16 mm LG
151	26	26	HDW	HEX BOLT, M8 X 1.25, 20 mm LG
152	4	4	HDW	HEX BOLT, M8 X 1.25, 25 mm LG
153	1	1	HDW	HEX BOLT, M8 X 1.25, 30 mm LG
154	4	4	HDW	HEX BOLT, M8 X 1.25, 35 mm LG
155	2	6	HDW	HEX BOLT, M8 X 1.25, 40 mm LG
156	2	2	HDW	HEX BOLT, M8 X 1.25, 70 mm LG, 22 mm LG THD
157	4	4	HDW	HEX BOLT, M8 X 1.25, 110 mm LG, 22 mm LG THD
158	2	2	HDW	HEX BOLT, M10 X 1.5, 20 mm LG
159	2	2	HDW	HEX BOLT, M10 X 1.5, 25 mm LG
160	5	1	HDW	HEX BOLT, M10 X 1.5, 45 mm LG
161	4	4	HDW	HEX BOLT, M10 X 1.5, 50 mm LG
162	4	4	HDW	HEX BOLT, M10 X 1.5, 75 mm LG, 26 mm LG THD
163	4	4	HDW	HEX BOLT, M10 X 1.5, 80 mm LG, 26 mm LG THD
164	1	1	HDW	HEX BOLT, M12 X 1.75, 20 mm LG
165	4	4	HDW	HEX BOLT, M12 X 1.75, 30 mm LG
166	2	2	HDW	HEX BOLT, M12 X 1.75, 45 mm LG
167	17	17	HDW	HEX BOLT, M12 X 1.75, 80 mm LG, 30 mm LG THD
168	1	1	HDW	HEX BOLT, M12 X 1.75, 90 mm LG, 30 mm LG THD
169	1	1	HDW	HEX BOLT, M12 X 1.75, 100 mm LG, 30 mm LG THD
170	1	1	HDW	HEX BOLT, M16 X 2, 90 mm LG, 38 mm LG THD
171	4	4	HDW	HEX BOLT, M20 X 2.5, 120 mm LG, 46 mm LG THD
172	-	1	HDW	HEX BOLT, 5/16-24, 5/8 in LG
173	2	-	HDW	HEX BOLT, 3/8-16, 3/4 in LG
174	1	-	HDW	HEX BOLT, 7/16-20, 1-1/4 in LG
175	30	30	HDW	HEX BOLT, FLANGED, M10 X 1.5, 25 mm LG
176	12	12	HDW	HEX BOLT, FLANGED, M10 X 1.5, 30 mm LG
177	2	2	HDW	HEX BOLT, FLANGED, M10 X 1.5, 70 mm LG, 26 mm LG THD
178	6	6	HDW	BUTTON HEAD SCREW, M4 X 0.7, 6 mm LG
179	2	2	HDW	BUTTON HEAD SCREW, M4 X 0.7, 10 mm LG
180	8	8	HDW	BUTTON HEAD SCREW, M6 X 1, 16 mm LG
181	4	4	HDW	BUTTON HEAD SCREW, M8 X 1.25, 16 mm LG
182	4	4	HDW	SHCS, M8 X 1.25, 20 mm LG
183	2	2	HDW	SHCS, M10 X 1.5, 25 mm LG
184	12	12	HDW	SCREW, PFH, M4 X 0.7, 10 mm LG
185	1	1	HDW	SCREW, PPH, M4 X 0.7, 12 mm LG
186	2	2	HDW	SCREW, PPH, M4 X 0.7, 30 mm LG
187	2	2	HDW	SCREW, PPH, M6 X 1, 14 mm LG
188	1	1	HDW	SCREW, HFH, M6 X 1, 30 mm LG, 18 mm THD
189	1	1	HDW	SCREW, HFH, M10 X 1.5, 20 mm LG
190	2	2	HDW	SET SCREW, FLAT TIP, M6 X 1, 8 mm LG
191	8	8	HDW	SET SCREW, FLAT TIP, M8 X 1.25, 8 mm LG, SST
192	2	2	HDW	SELF-TAPPING SCREW, PPH, #10, 5/8 in LG
193	4	4	HDW	FLAT WASHER, M4
194	-	2	HDW	FLAT WASHER, M5
195	37	37	HDW	FLAT WASHER, M6

Item	Quantity		Part No.	Description
	9.5 hp	7 hp		
196	24	28	HDW	FLAT WASHER, M8
197	12	12	HDW	FLAT WASHER, M8, NYLON
198	32	28	HDW	FLAT WASHER, M10
199	39	39	HDW	FLAT WASHER, M12
200	1	1	HDW	FLAT WASHER, M16
201	12	13	HDW	FLAT WASHER, M20
202	-	5	HDW	FENDER WASHER, M8, 24 mm OD
203	6	6	HDW	FENDER WASHER, M8, 30 mm OD
204	4	-	HDW	FENDER WASHER, M10, 30 mm OD, 3 mm THK
205	2	2	HDW	FENDER WASHER, M10, 34 mm OD
206	2	2	HDW	FENDER WASHER, M12, 31 mm OD
207	1	-	HDW	FENDER WASHER, M12, 37 mm OD
208	-	2	HDW	SPLIT LOCK WASHER, M5
209	5	5	HDW	SPLIT LOCK WASHER, M6
210	-	1	HDW	SPLIT LOCK WASHER, M8
211	8	6	HDW	SPLIT LOCK WASHER, M10
212	1	-	HDW	SPLIT LOCK WASHER, M12
213	24	24	HDW	BELLEVILLE WASHER, 20.4 ID, 40 OD, 2.5 THK, 3.45 mm HGT
214	2	2	HDW	LEVELLING WASHER, FEMALE, M16
215	2	2	HDW	LEVELLING WASHER, MALE, M16
216	-	2	HDW	SEALING WASHER, M10
217	2	-	HDW	SEALING WASHER, M12
218	2	2	HDW	HEX NUT, M6 X 1
219	2	2	HDW	HEX NUT, M8 X 1.25
220	1	1	HDW	HEX NUT, M10 X 1.5
221	4	4	HDW	HEX NUT, M12 X 1.75
222	1	1	HDW	HEX NUT, THIN, M6 X 1, 3.2 mm THK
223	1	1	HDW	HEX NUT, THIN, M10 X 1.25, 5 mm THK
224	10	10	HDW	LOCK NUT, M4 X 0.7
225	17	17	HDW	LOCK NUT, M6 X 1
226	34	38	HDW	LOCK NUT, M8 X 1.25
227	13	9	HDW	LOCK NUT, M10 X 1.5
228	19	19	HDW	LOCK NUT, M12 X 1.75
229	1	1	HDW	LOCK NUT, M16 X 2
230	4	4	HDW	LOCK NUT, M20 X 2.5
231	38	38	HDW	LOCK NUT, FLANGED, M10 X 1.5
232	4	4	HDW	RETAINING RING, INTERNAL, 28 mm BORE (29.4 mm GROOVE)
233	1	1	HDW	RETAINING RING, INTERNAL, 40 mm BORE (42.5 mm GROOVE)
234	2	2	HDW	RETAINING RING, INTERNAL, 62 mm BORE (65 mm GROOVE)

EXPLODED ASSEMBLY VIEWS

TRACK

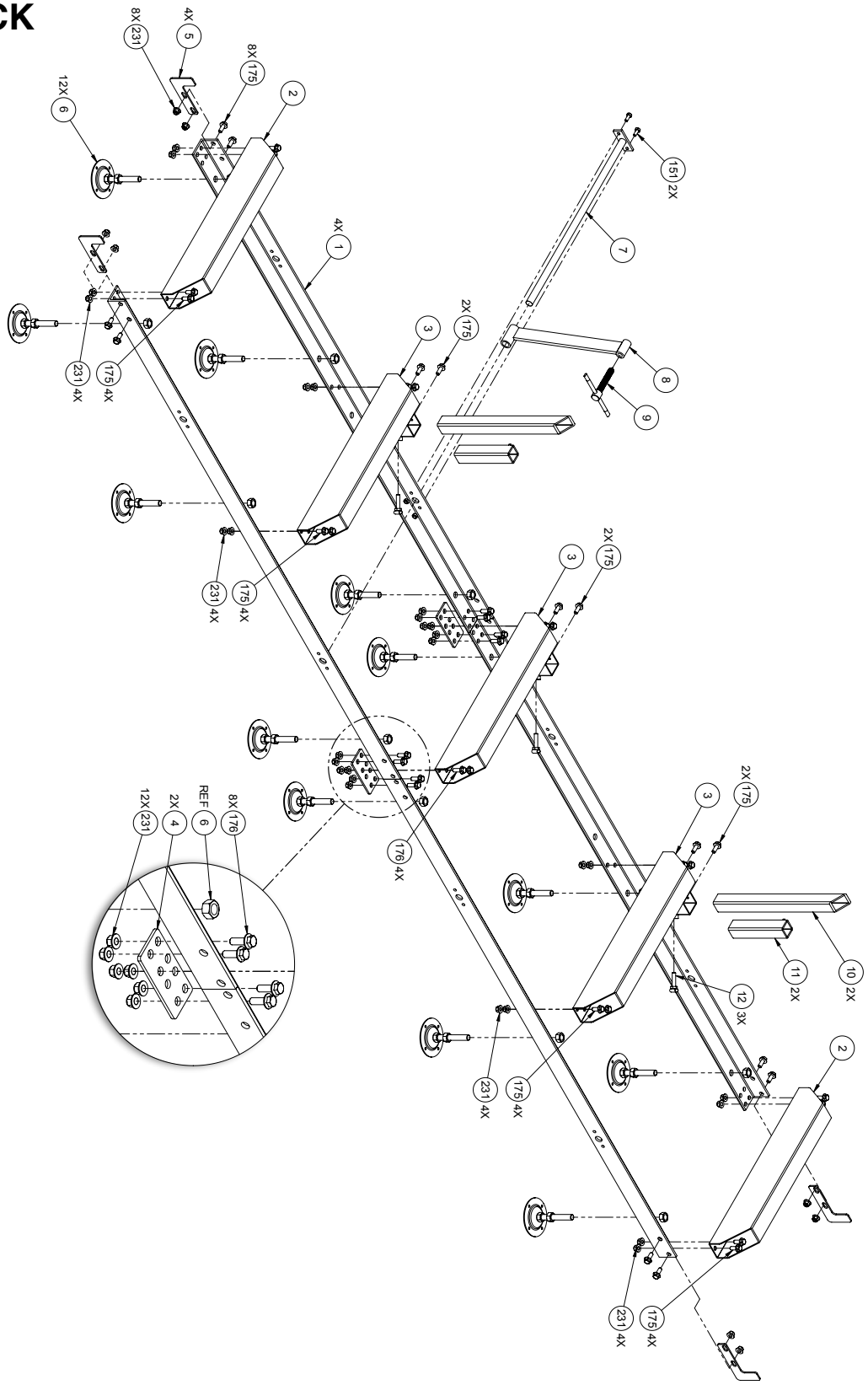

SAWHEAD

9.5 hp model shown.

**** Blackened item balloons are specific to 7 horsepower model. ****

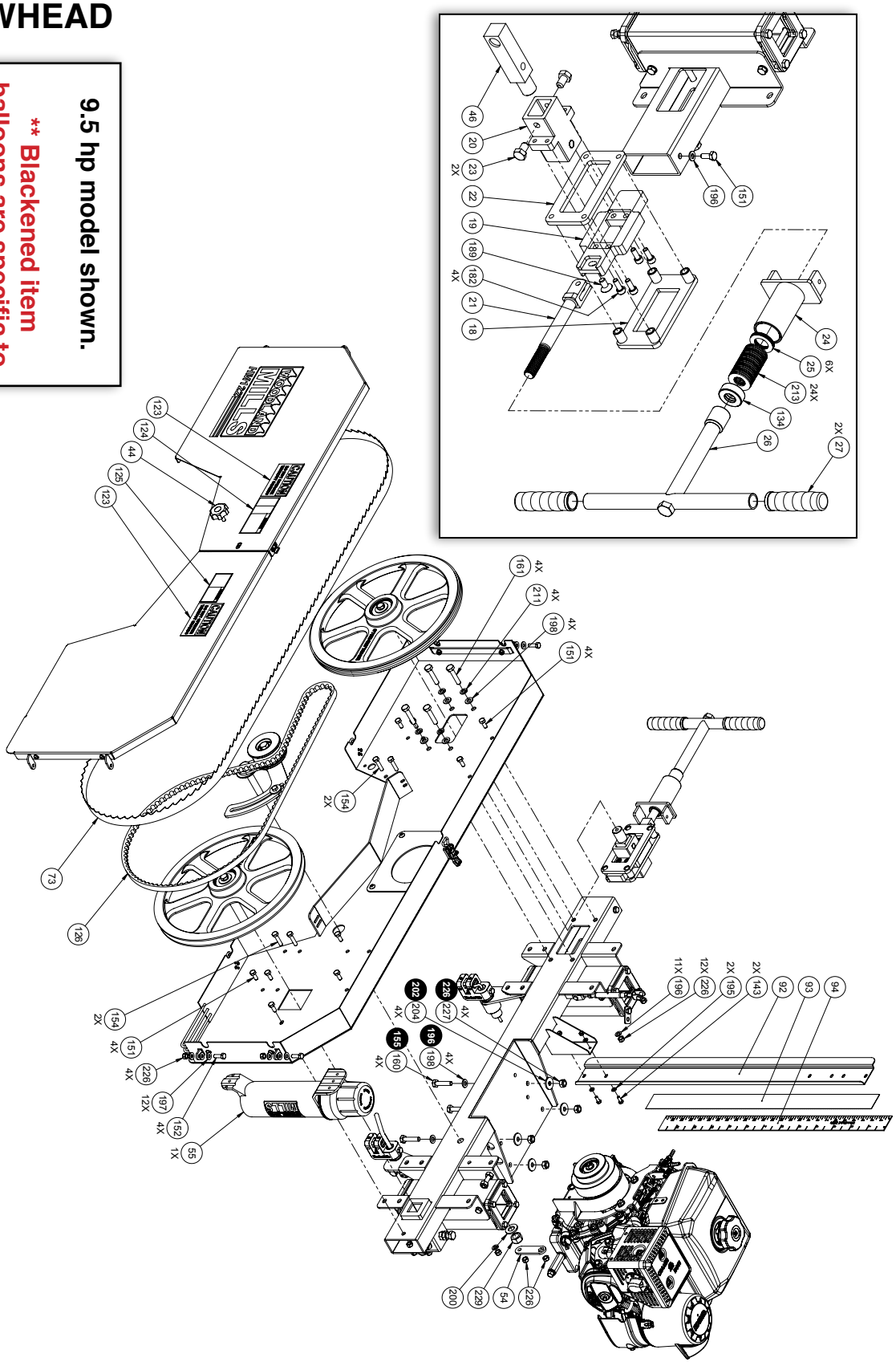

BACK BEAM

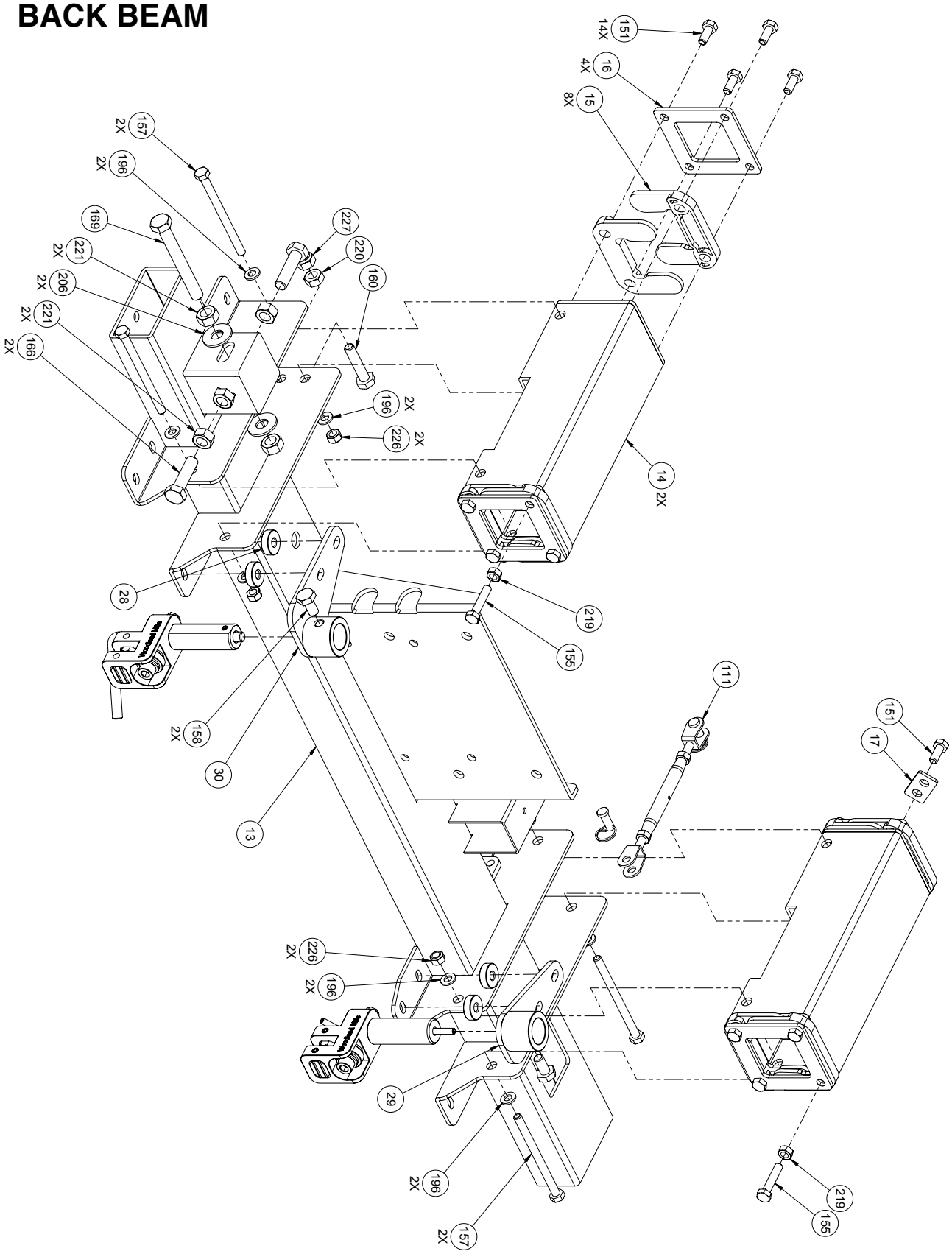
151 14X
16 4X
15 8X
157 2X
196 2X
169
227
220
221 2X
160
206 2X
221 2X
166 2X
196 2X
226 2X
14 2X
28
219
155
158 2X
30
13
111
151
17
226 2X
196 2X
29
196 2X
157 2X
219
155

GUIDE BLOCKS

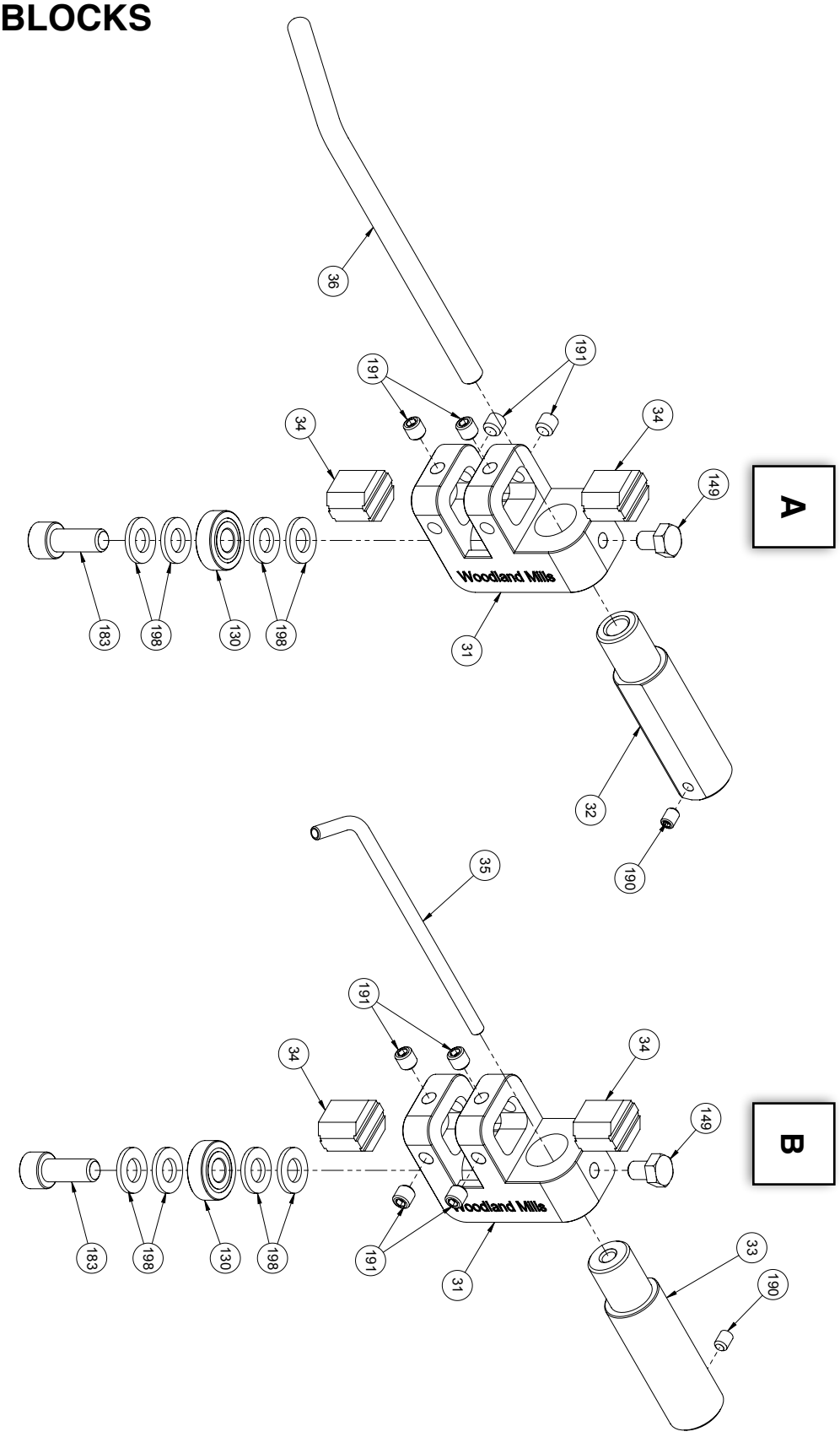

BAND WHEEL HOUSING

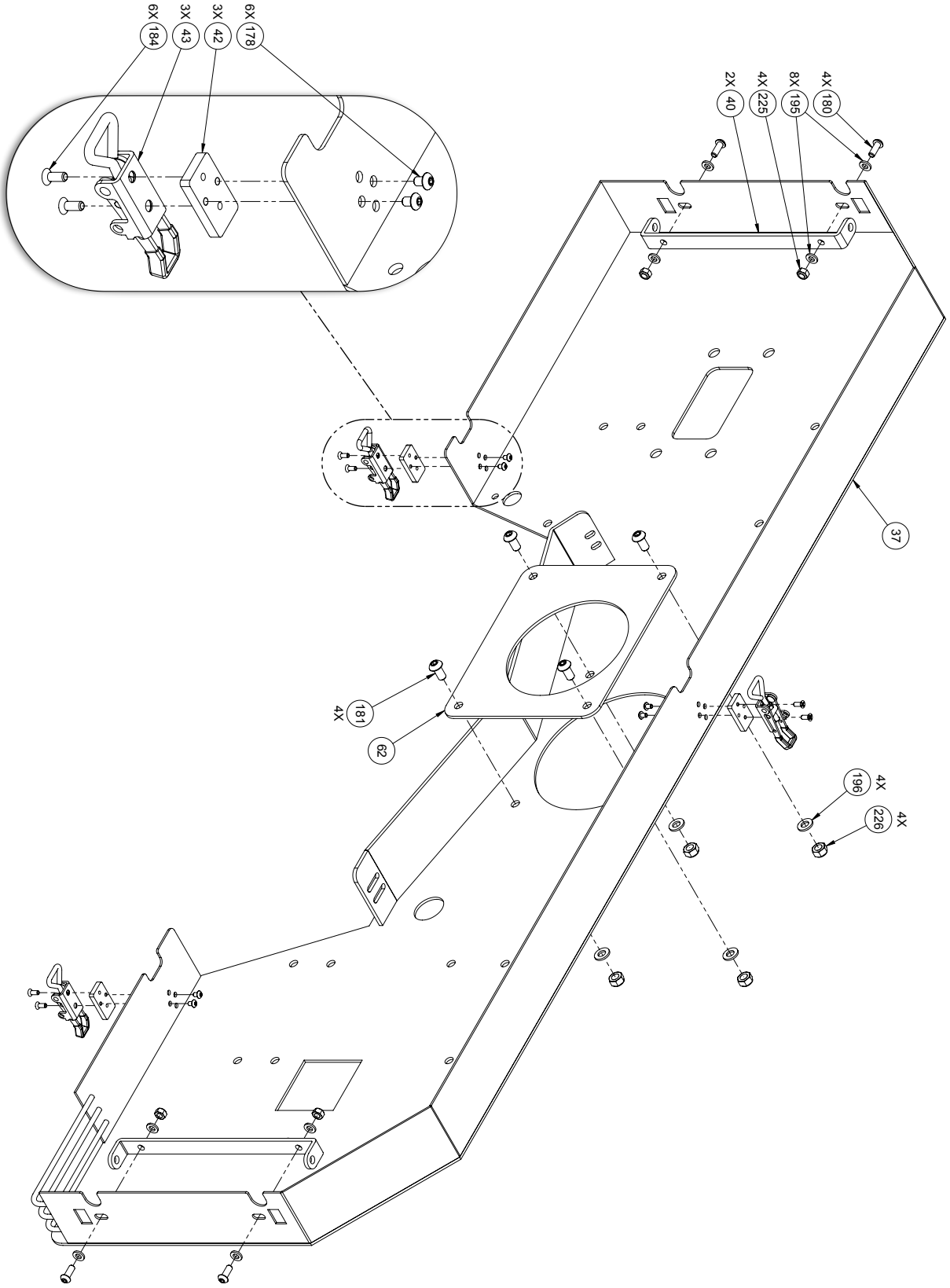

BAND WHEEL HOUSING DOORS

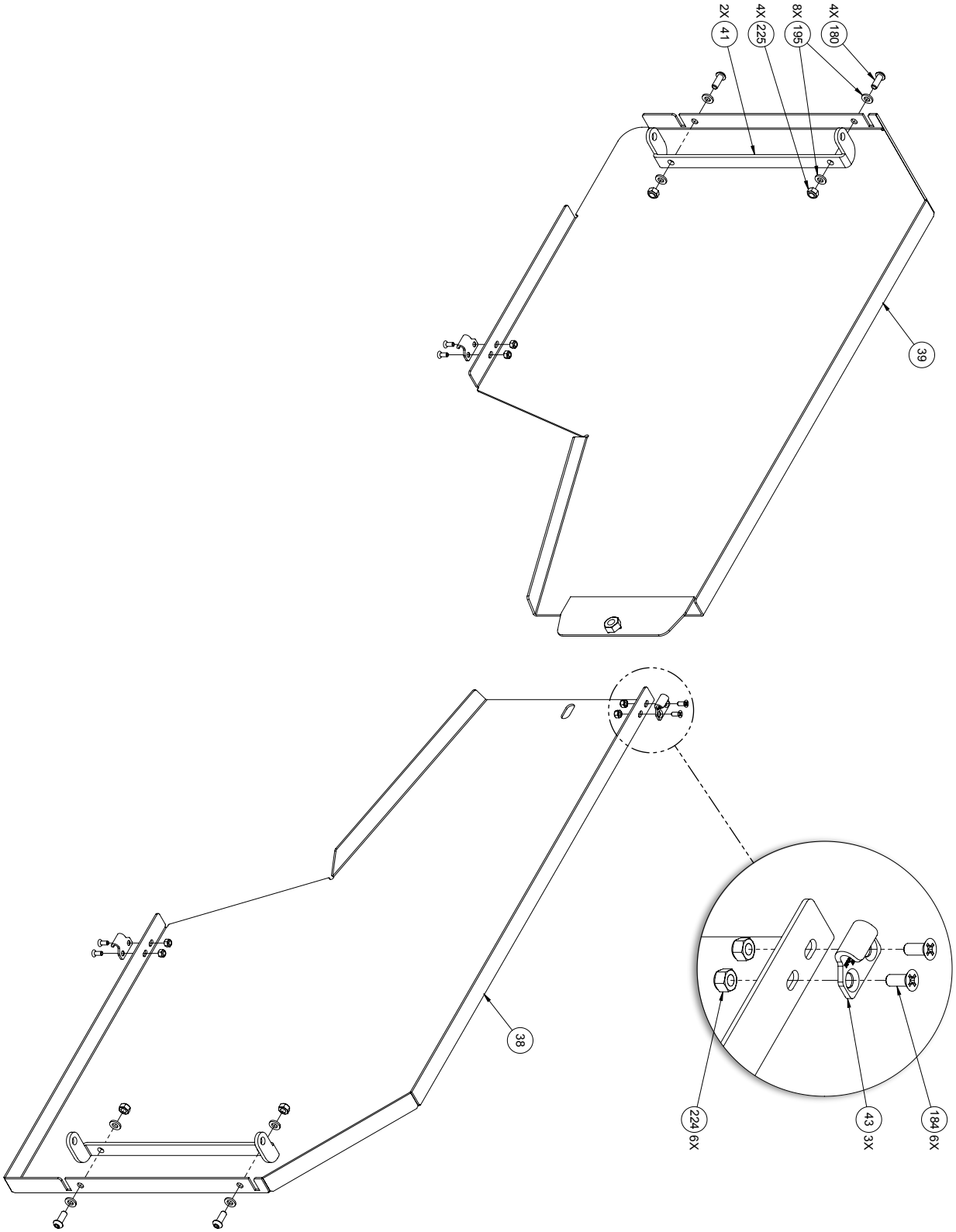

BAND WHEELS AND BELT TENSIONER

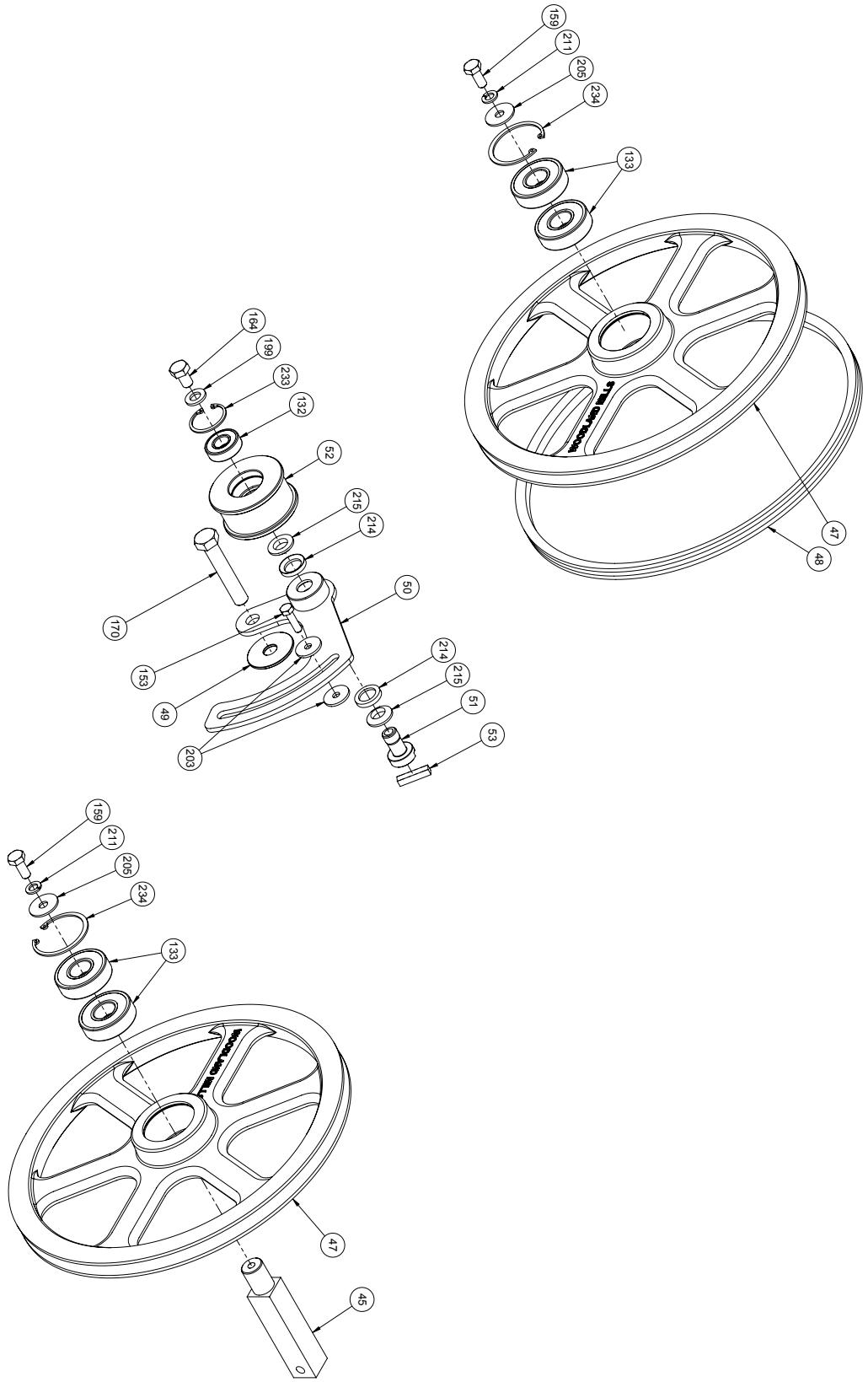

ENGINE COMPONENTS—9.5 hp

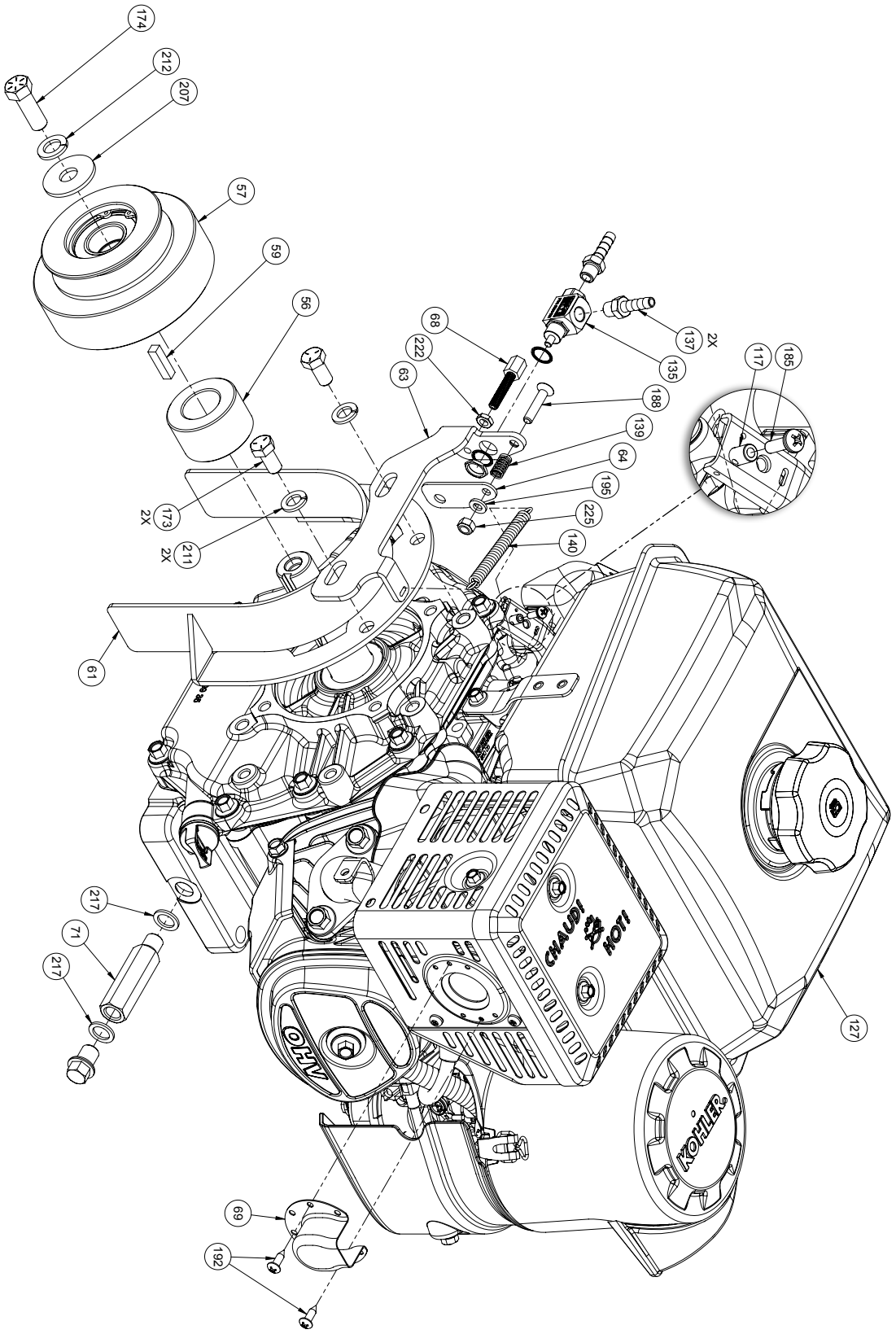

ENGINE COMPONENTS—7 hp

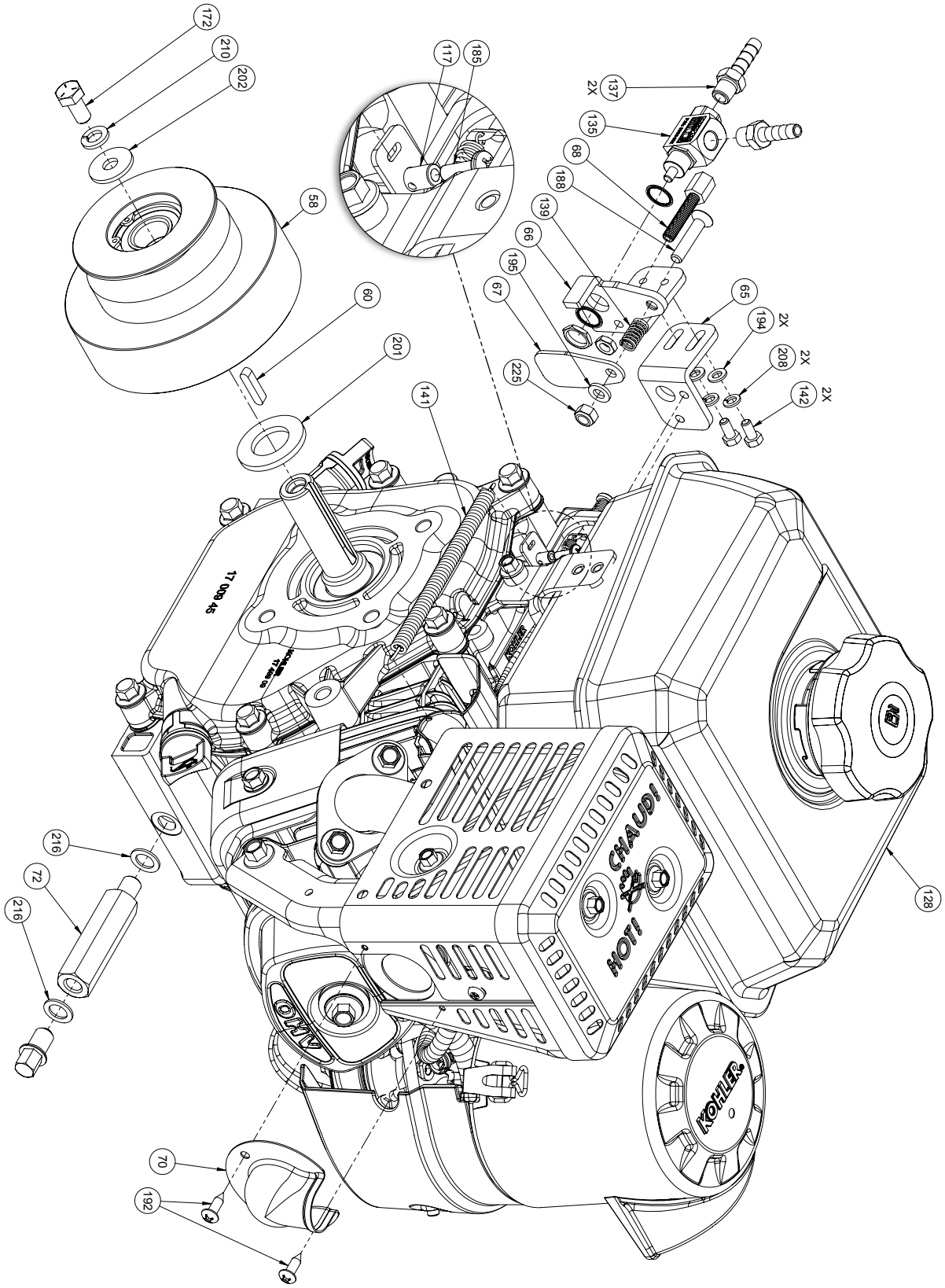

CARRIAGE

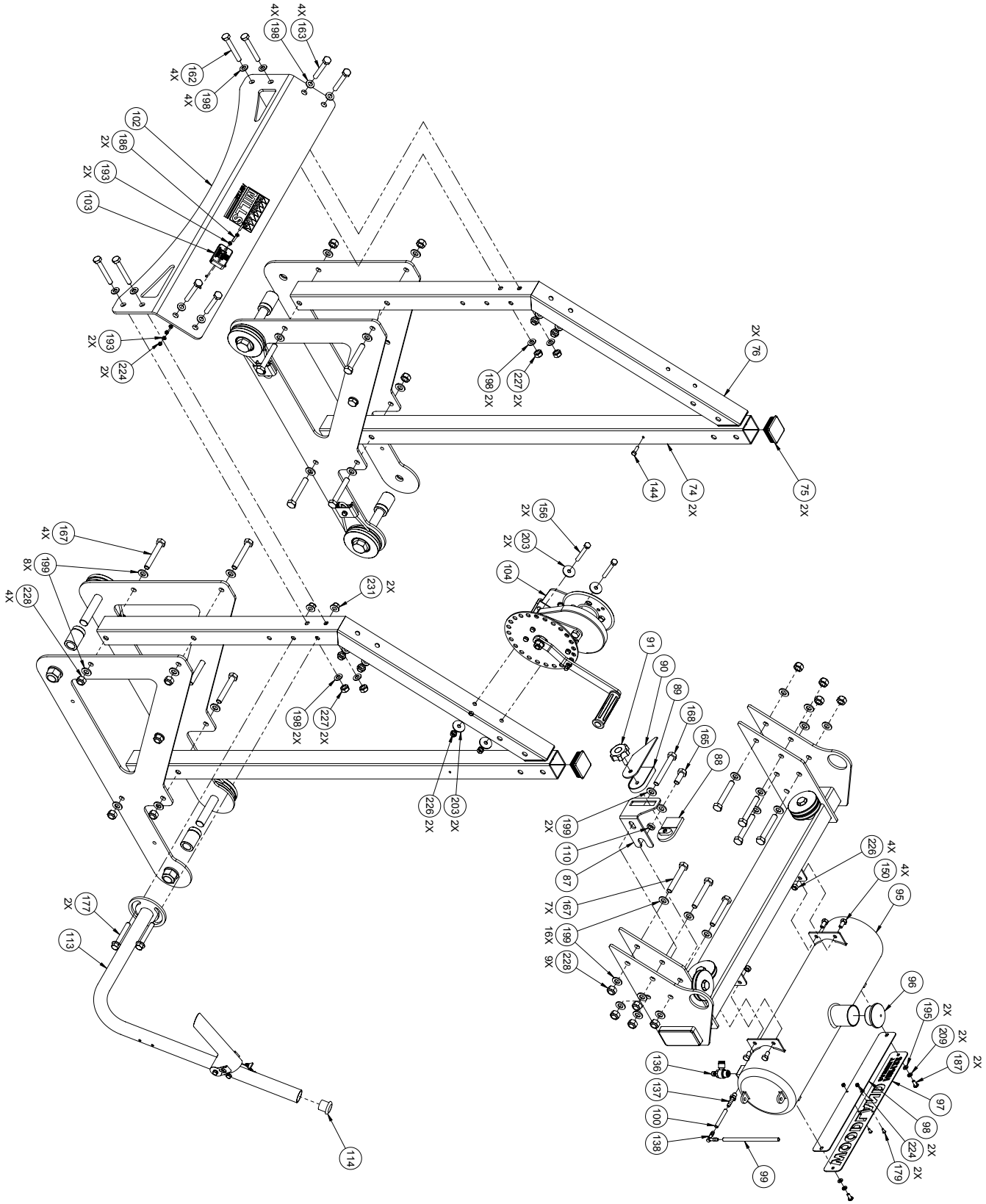
4X 198
4X 163
4X 162
4X 198
102
2X 186
2X 193
103
2X 193
2X 224
2X 76
196 2X
227 2X
144
74 2X
75 2X
156 2X
2X 203
104
4X 167
8X 199
4X 228
231 2X
198 2X
227 2X
226 2X
203 2X
91
90
89
168
165
88
2X 199
110
87
7X 167
16X 199
9X 228
226 4X
150 4X
95
96
195 2X
209 2X
187 2X
136
137
100
138
97
98
224 2X
179 2X
99
2X 177
113
114

CROSS BEAM

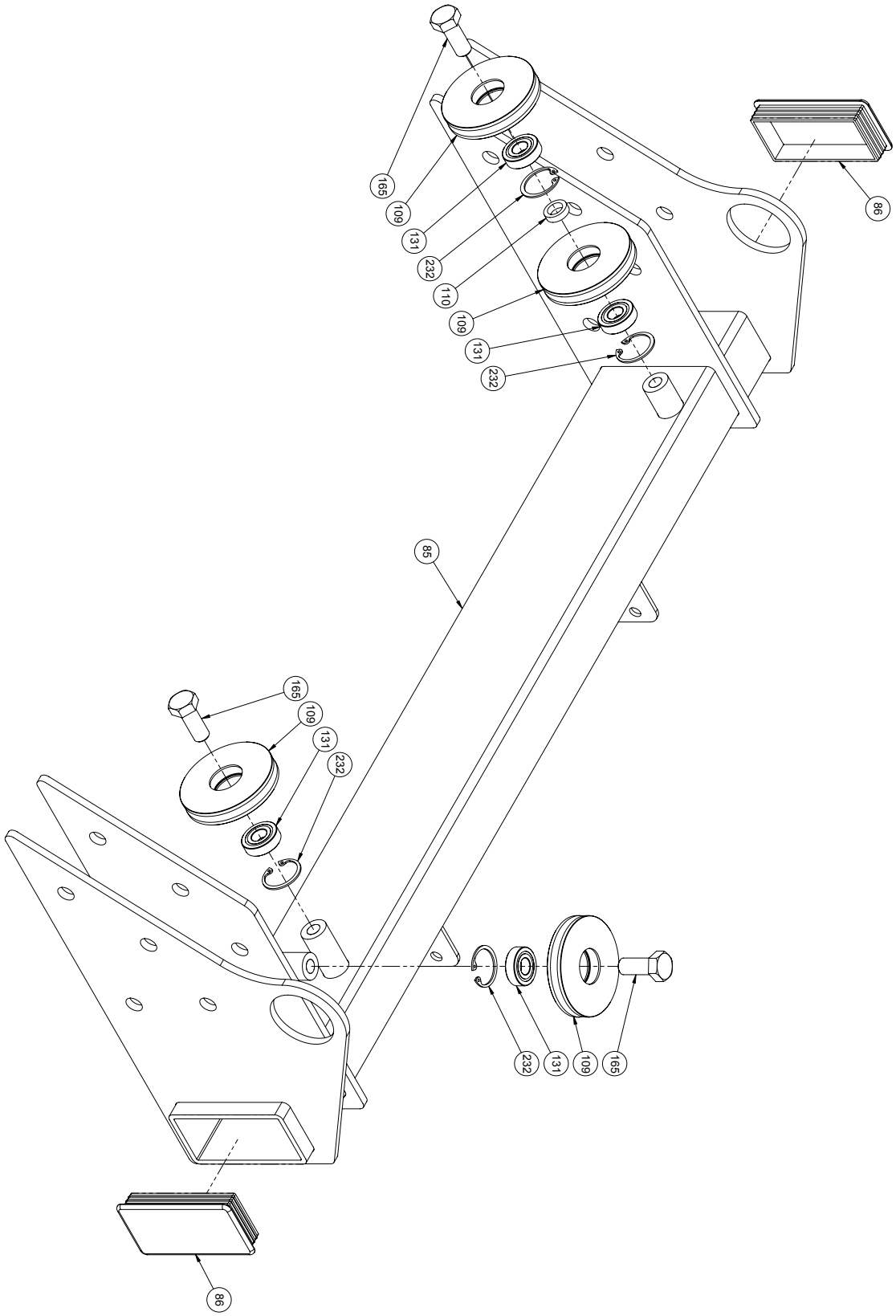
165
109
131
232
110
109
131
232
86
85
165
109
131
232
232
131
109
165
86

CARRIAGE LEG, WHEEL, AND SWEEPER

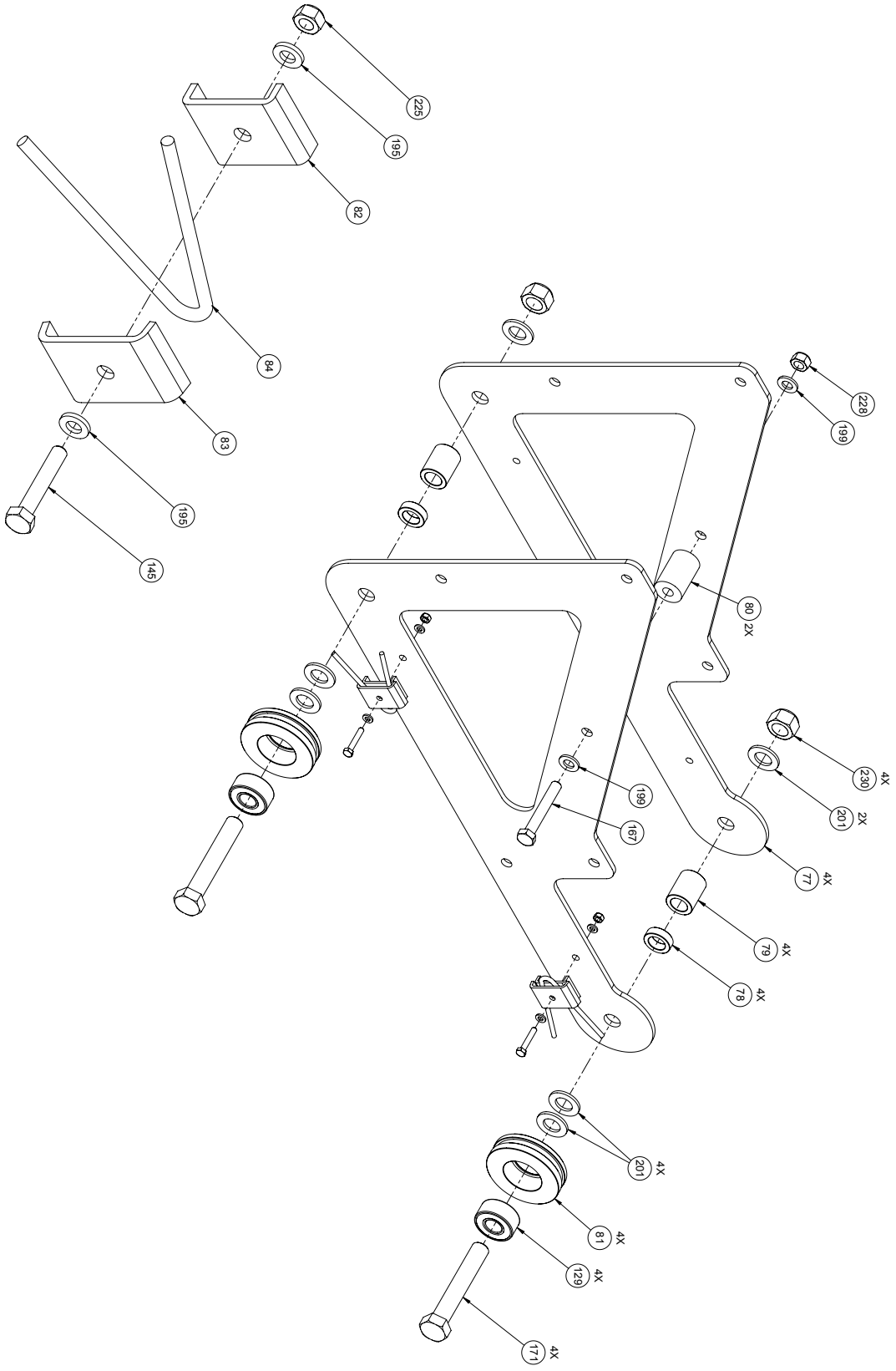

WINCH

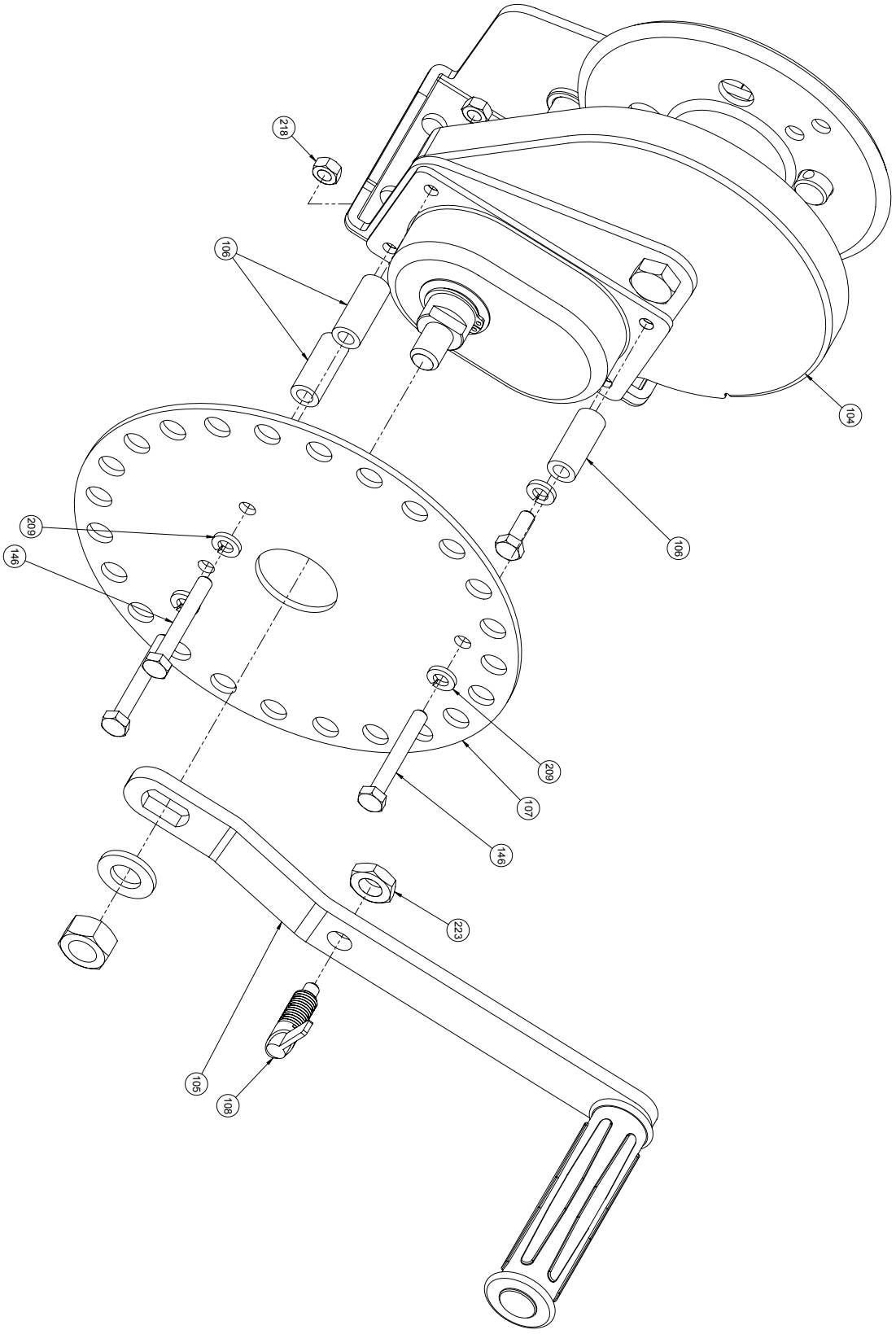

THROTTLE HANDLE

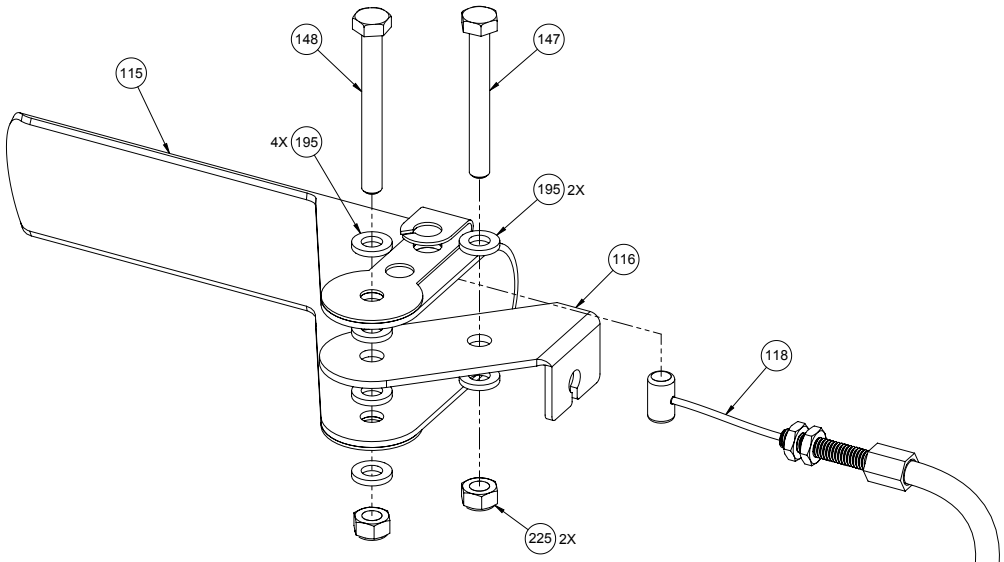

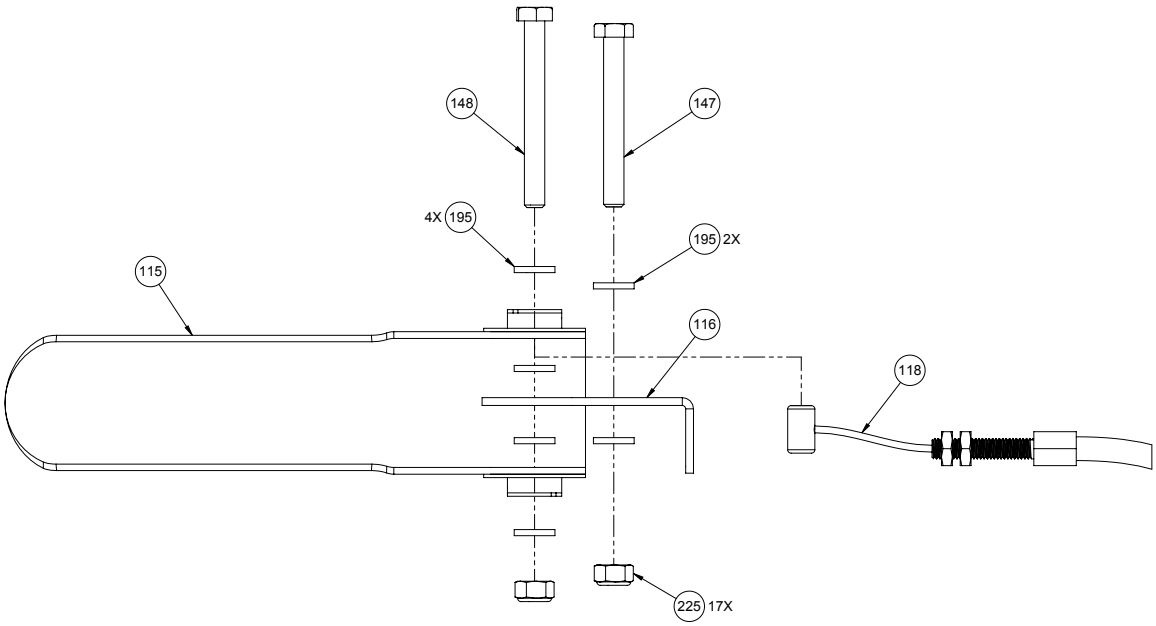

CABLES, TUBING & LABELS

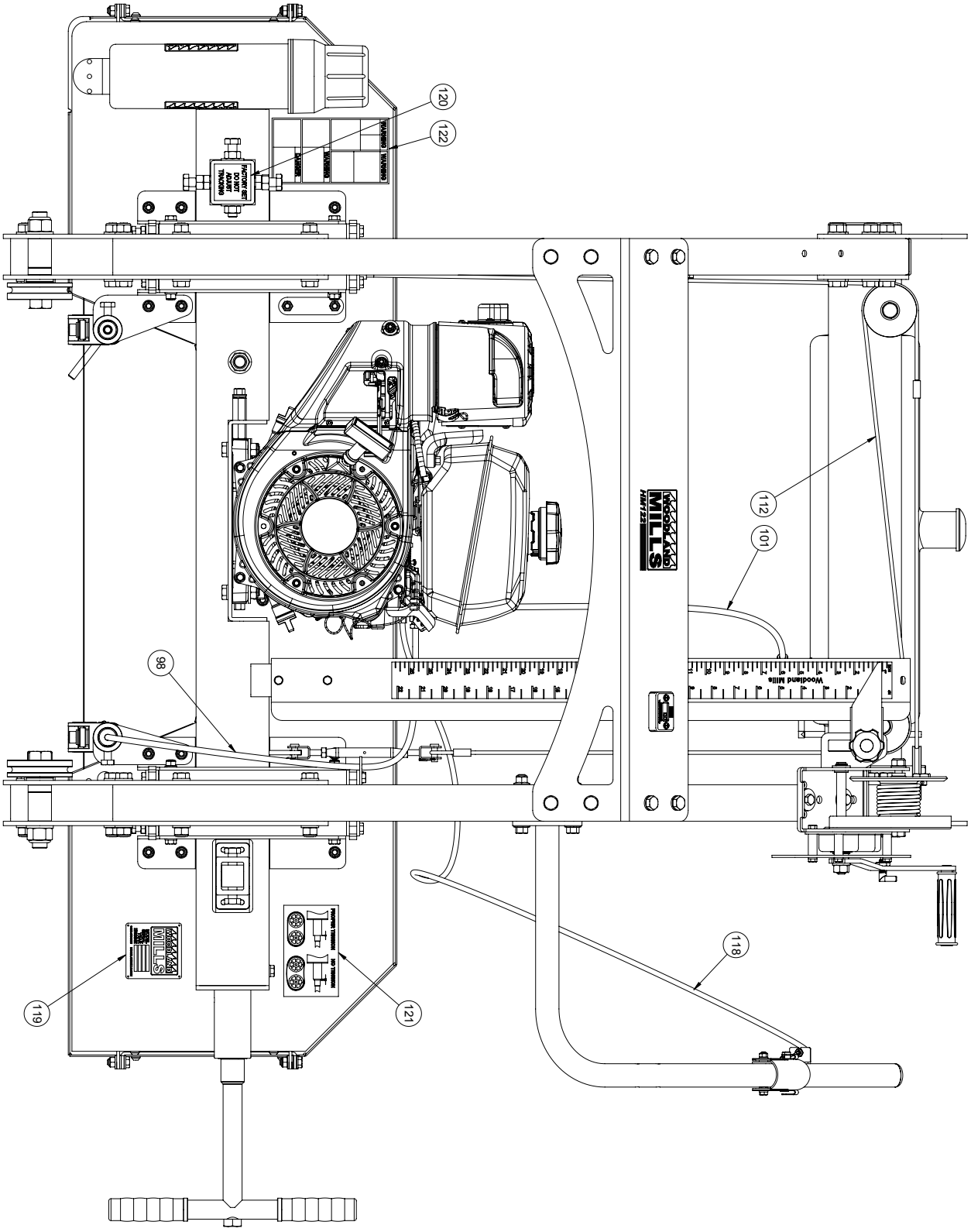

NOTES

This page intentionally left blank.


WOODLAND
MILLS